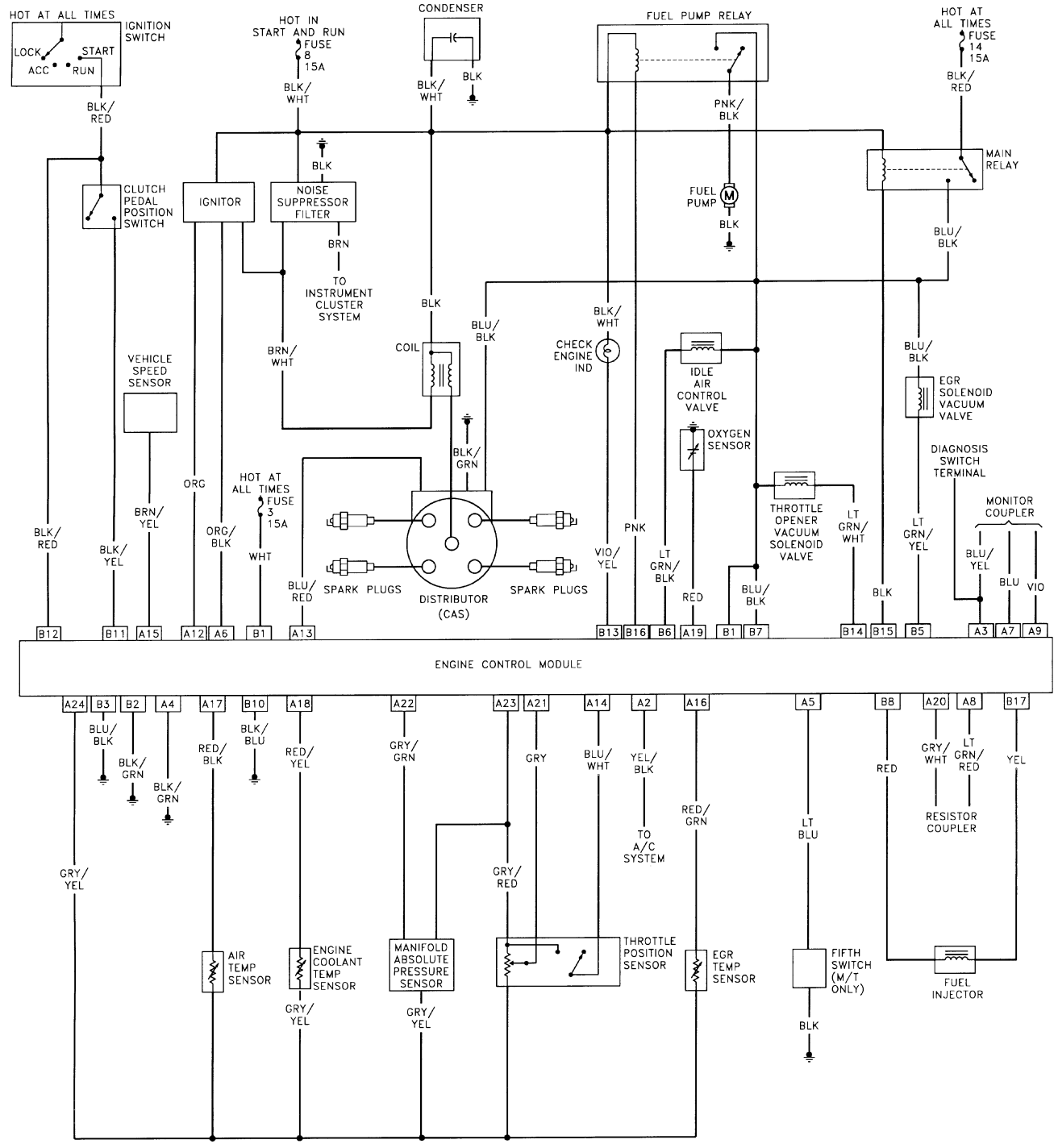
HOT AT ALL TIMES
IGNITION SWITCH
LOCK
START
ACC
RUN
BLK/RED
HOT IN START AND RUN
FUSE 8 15A
BLK/WHT
CONDENSER
BLK/WHT
BLK
FUEL PUMP RELAY
PNK/BLK
HOT AT ALL TIMES
FUSE 14 15A
BLK/RED
MAIN RELAY
CLUTCH PEDAL POSITION SWITCH
IGNITOR
NOISE SUPPRESSOR FILTER
BLK
BRN
TO INSTRUMENT CLUSTER SYSTEM
FUEL PUMP
BLK
BLU/BLK
BLK
BLU/BLK
BLK/WHT
CHECK ENGINE IND
IDLE AIR CONTROL VALVE
BLU/BLK
EGR SOLENOID VACUUM VALVE
VEHICLE SPEED SENSOR
BRN/WHT
COIL
OXYGEN SENSOR
BLK/GRN
DIAGNOSIS SWITCH TERMINAL
ORG
HOT AT ALL TIMES
FUSE 3 15A
THROTTLE OPENER VACUUM SOLENOID VALVE
LT GRN/WHT
MONITOR COUPLER
BRN/YEL
ORG/BLK
WHT
PNK
LT GRN/YEL
BLK/RED
BLK/YEL
BLU/RED
SPARK PLUGS
DISTRIBUTOR (CAS)
SPARK PLUGS
VIO/YEL
LT GRN/BLK
RED
BLU/BLK
BLK
BLU/YEL
BLU
VIO
B12
B11
A15
A12
A6
B1
A13
B13
B16
B6
A19
B1
B7
B14
B15
B5
A3
A7
A9
ENGINE CONTROL MODULE
A24
B3
B2
A4
A17
B10
A18
A22
A23
A21
A14
A2
A16
A5
B8
A20
A8
B17
BLU/BLK
BLK/GRN
BLK/GRN
RED/BLK
BLK/BLU
RED/YEL
GRY/GRN
GRY
BLU/WHT
YEL/BLK
RED/GRN
LT BLU
RED
GRY/WHT
LT GRN/RED
YEL
RESISTOR COUPLER
TO A/C SYSTEM
GRY/YEL
GRY/RED
AIR TEMP SENSOR
ENGINE COOLANT TEMP SENSOR
MANIFOLD ABSOLUTE PRESSURE SENSOR
THROTTLE POSITION SENSOR
EGR TEMP SENSOR
FIFTH SWITCH (M/T ONLY)
FUEL INJECTOR
GRY/YEL
GRY/YEL
BLK