ANTI-SKID BRAKING SYSTEM (ABS) <4WD>

Click on the applicable bookmark to selected the required model year

ANTI-SKID BRAKING SYSTEM (ABS) <4WD>

CONTENTS

Click on the applicable bookmark to selected the required model year

CONTINUED ON NEXT PAGE

GENERAL INFORMATION

The ABS consists of components such as the wheel speed sensors, stop lamp switch, hydraulic unit assembly (integrated with the ABS-ECU) and the ABS warning lamp. If a problem occurs in the system, the malfunctioning components can be identified and the trouble symptoms will be memorized by the diagnosis function.
In addition, reading of diagnosis codes and service data and actuator testing are possible by using the MUT-II.

WHEEL SPEED SENSOR

Type	Magnet coil type
ABS rotor teeth	43

CONSTRUCTION DIAGRAM

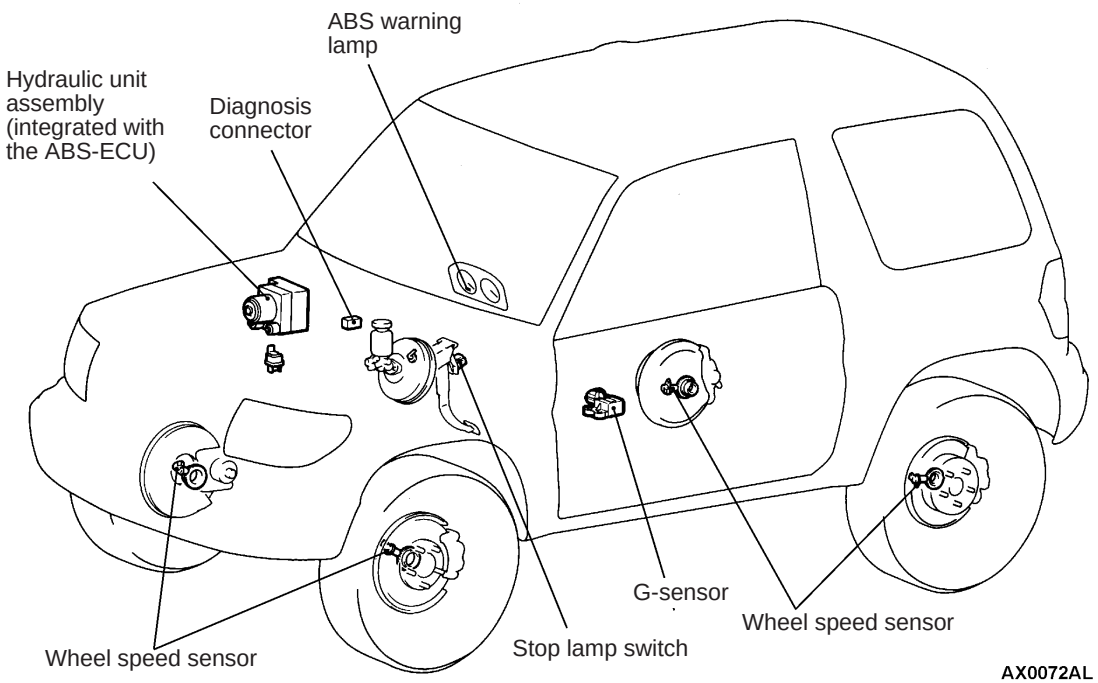

SERVICE SPECIFICATIONS

Items		Standard value
Wheel speed sensor internal resistance kΩ		1.30 – 1.58
Wheel speed sensor insulation resistance kΩ		100 or more
G sensor output voltage V	When labeled surface is faced to vertical direction	2.4 – 2.6
	When labeled surface is faced straight down	3.3 – 3.7

SPECIAL TOOLS

Tool	Number	Name	Use
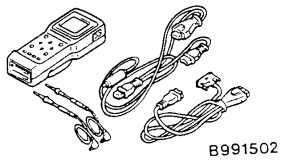	MB991502	MUT-II sub assembly	For checking of ABS (Diagnosis code display when using the MUT-II)
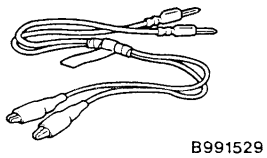	MB991529	Diagnosis code check harness	For checking of ABS (Diagnosis code display when using the ABS warning lamp)
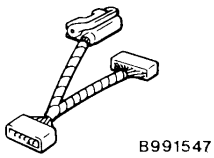	MB991547	ABS check harness	For measuring of ABS-ECU terminal voltage
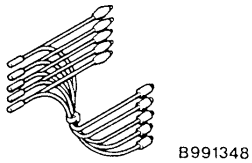	MB991348	Test harness set	For checking of G sensor

TROUBLESHOOTING

STANDARD FLOW OF DIAGNOSTIC TROUBLESHOOTING

Refer to GROUP 00 – How to Use Troubleshooting/Inspection Service Points.

NOTES WITH REGARD TO DIAGNOSIS

1. The phenomena listed in the following table are not abnormal.

Phenomenon	Explanation of phenomenon
System check sound	When starting the engine, a thudding sound can sometimes be heard coming from inside the engine compartment, but this is because the system operation check is being performed, and is not an abnormality.
ABS operation sound	1. Sound of the motor inside the ABS hydraulic unit operation. (whine) 2. Sound is the generated along with vibration of the brake pedal. (scraping) 3. When ABS operates, sound is generated from the vehicle chassis due to repeated brake application and release. (Thump: suspension; squeak: tyres)
System check sound	When depressing the brake pedal during driving, a shock is sometime felt.

2. For road surfaces such as snow-covered roads and gravel roads, the braking distance for vehicles with ABS can sometimes be longer than that for other vehicles. Accordingly, advise the customer to drive safely on such roads by lowering the vehicle speed and not being too overconfident.
3. Diagnosis detection condition can vary depending on the diagnosis code.
   Make sure that checking requirements listed in the “Comment” are satisfied when checking the trouble symptom again.

Caution
Use the special tool (MB991547) when checking the terminal voltage and resistance of ABS-ECU.

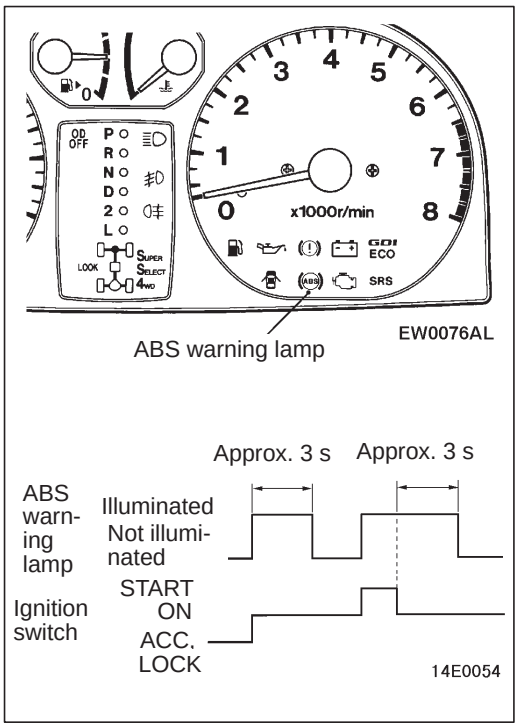

ABS WARNING LAMP INSPECTION

Check that the ABS warning lamp illuminates as follows.

1. When the ignition key is turned to “ON”, the ABS warning lamp illuminates for approximately 3 seconds and then switches off.
2. When the ignition key is turned to “START”, the ABS warning lamp remains illuminated.
3. When the ignition key is turned from “START” back to “ON”, the ABS warning lamp illuminates for approximately 3 seconds and then switches off.

   NOTE
   The ABS warning lamp may remain on until the vehicle reaches a speed of several km/h. This is limited to cases where diagnosis code Nos.21 to 24, 53 or 55 have been recorded because of a previous problem occurring. In this case, the ABS-ECU keeps the warning lamp illuminated until the problem corresponding to that diagnosis code can be detected.
4. If the illumination is other than the above, check the diagnosis codes.

DIAGNOSIS FUNCTION

READING DIAGNOSIS CODES

Read a diagnosis code by the MUT-II or ABS warning lamp. (Refer to GROUP 00 – How to Use Troubleshooting/Inspection Service Points.)

NOTE
Connect the MUT-II to the diagnosis connector (16-pin).

ERASING DIAGNOSIS CODES

When using the MUT-II

Connect the MUT-II to the diagnosis connector (16-pin) and erase the diagnosis code.

Caution
Turn the ignition key to the LOCK (OFF) position before connecting or disconnecting the MUT-II.

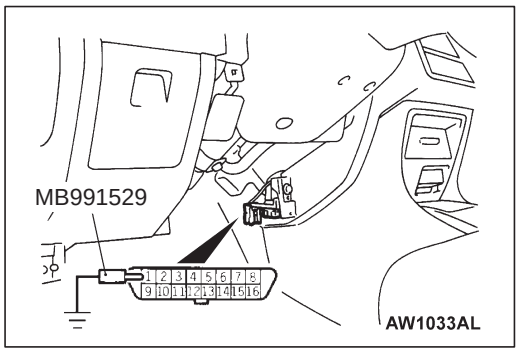

When not using the MUT-II

1. Stop the engine.
2. Use the special tool to earth terminal (1) (diagnosis control terminal) of the diagnosis connector.
3. Turn on the stop lamp switch. (Depress the brake pedal.)
4. After carrying out steps 1. to 3., turn the ignition switch to ON. Within 3 seconds after turning the ignition switch to ON, turn off the stop lamp switch (release the brake pedal). Then, turn the stop lamp switch on and off a total of 10 times.

   NOTE
   If the ABS-ECU function has been stopped because of fail-safe operation, it will not be possible to erase the diagnosis codes.

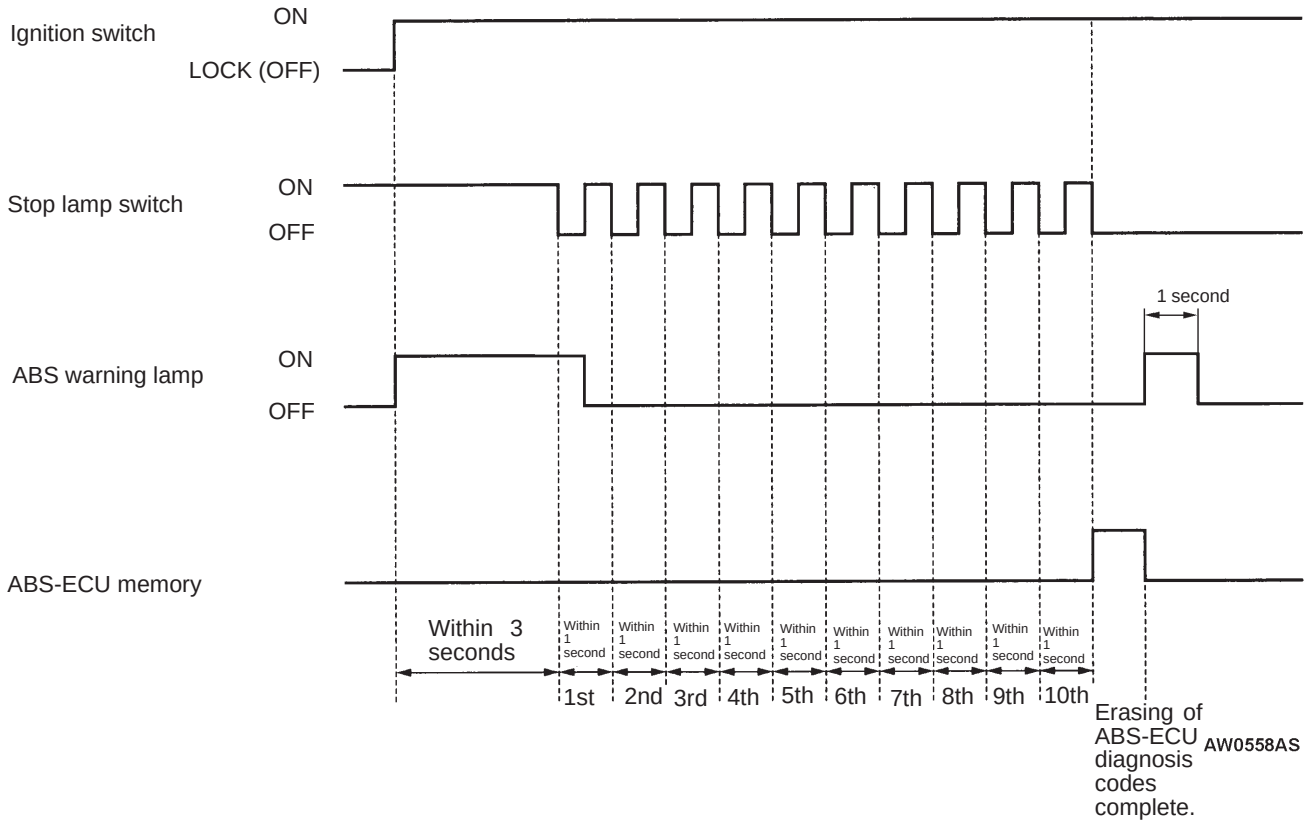

INSPECTION CHART FOR DIAGNOSIS CODES

Diagnosis code No.	Inspection item		Reference page
11	Front right wheel speed sensor (Open circuit or short circuit)		35B-9
12	Front left wheel speed sensor (Open circuit or short circuit)		35B-9
13	Rear right wheel speed sensor (Open circuit or short circuit)		35B-9
14	Rear left wheel speed sensor (Open circuit or short circuit)		35B-9
15	Wheel speed sensor (Abnormal output signal)		35B-10
16*	ABS-ECU power supply system (Abnormal voltage drop or rise)		35B-11
21	Front right wheel speed sensor		35B-9
22	Front left wheel speed sensor		35B-9
23	Rear right wheel speed sensor		35B-9
24	Rear left wheel speed sensor		35B-9
32	G sensor system		35B-12
33	Stop lamp switch system		35B-13
41	Front right solenoid valve	The diagnosis codes are output when there is no response to the drive signals for respective solenoid valves or the ABS-ECU power supply system is defective.	35B-13
42	Front left solenoid valve		
43	Rear right solenoid valve		
44	Rear left solenoid valve		
51	Valve relay problem (stays on)		35B-26, 27 (Replace the hydraulic unit and ABS-ECU.)
52	Valve relay problem (stays off) or ABS-ECU power supply system problem		35B-13
53	Motor relay problem (stays off) or ABS-ECU power supply system problem		
54	Motor relay problem (stays on)		35B-26, 27 (Replace the hydraulic unit and ABS-ECU.)
55	Motor system (seized pump motor) or ABS-ECU power supply system problem		35B-13
63	ABS-ECU		35B-26, 27 (Replace the hydraulic unit and ABS-ECU.)

NOTE
*: Turning the ignition switch to ACC will erase the diagnosis code No.16.

INSPECTION PROCEDURE FOR DIAGNOSIS CODES

Code Nos.11, 12, 13 and 14 Wheel speed sensor (open circuit or short circuit) Code Nos.21, 22, 23 and 24 Wheel speed sensor	Probable cause
Code Nos. 11, 12, 13 and 14 are output if the ABS-ECU detects an open circuit or short-circuit in the (+) wire or (–) wire in any one of the four wheel speed sensors.	● Malfunction of wheel speed sensor ● Malfunction of wiring harness or connector ● Malfunction of hydraulic unit and ABS-ECU
Code Nos. 21, 22, 23 and 24 are output in the following cases. ● When there is no input from any one of the four wheel speed sensors when travelling at several km/h or more, even though open circuit can not be verified. ● When a chipped or blocked-up ABS rotor is detected and if the anti-lock system operates continuously because a malfunctioning sensor or a warped ABS rotor is causing sensor output to drop.	● Malfunction of wheel speed sensor ● Malfunction of wiring harness or connector ● Malfunction of ABS rotor ● Too much gap between the sensor and the ABS rotor ● Malfunction of hydraulic unit and ABS-ECU ● Malfunction of wheel bearing

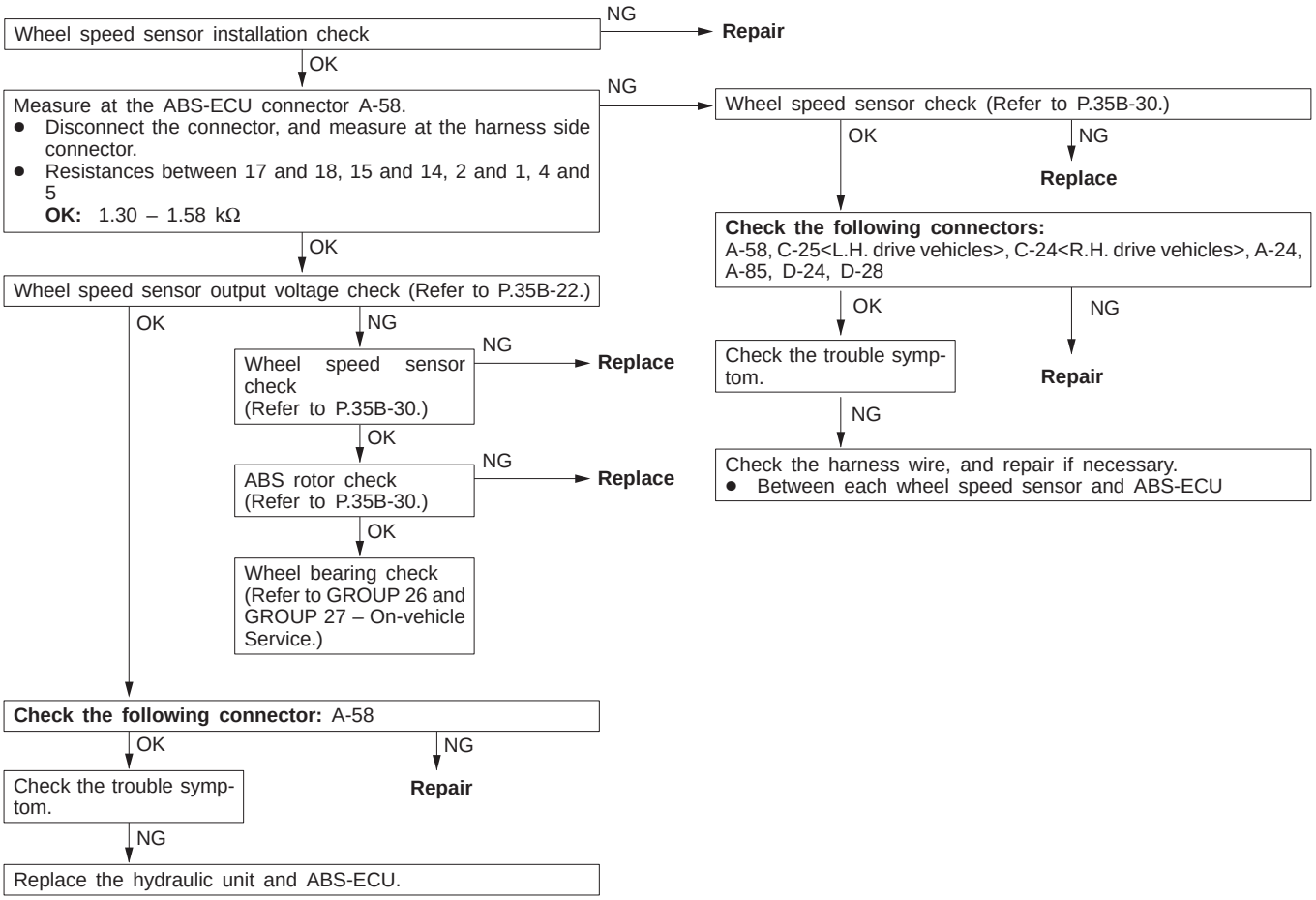

Code No.15 Wheel speed sensor (Abnormal output signal)	Probable cause
This code is output if the output signal of any wheel speed sensor is abnormal (other than an open circuit or short circuit).	● Unequal tyre size ● Improper installation of wheel speed sensor ● Malfunction of wheel speed sensor ● Malfunction of wiring harness or connector ● Malfunction of ABS rotor ● Malfunction of wheel bearing ● Malfunction of hydraulic unit and ABS-ECU

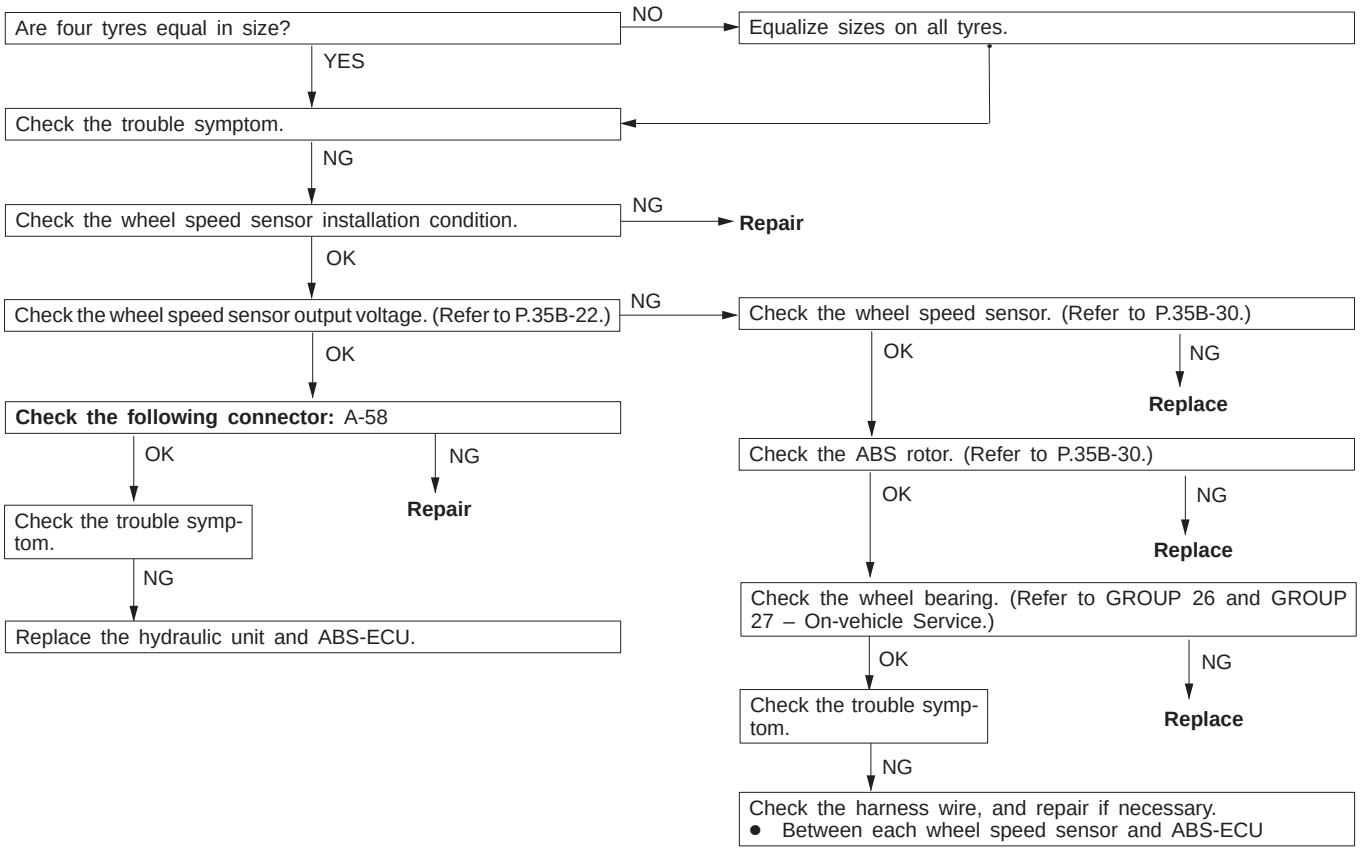

Code No.16 ABS-ECU power supply system (abnormal voltage drop or rise)	Probable cause
This code is output if the ABS-ECU power supply voltage drops below or rises above the rated values. Furthermore, turning the ignition switch to ACC will erase this code.	● Malfunction of battery ● Malfunction of wiring harness or connector ● Malfunction of hydraulic unit and ABS-ECU

Caution

If battery voltage drops or rises during inspection, this code will be output as well. If the voltage returns to standard value, this code is no longer output.

Before carrying out the following inspection, check the battery level, and refill it if necessary.

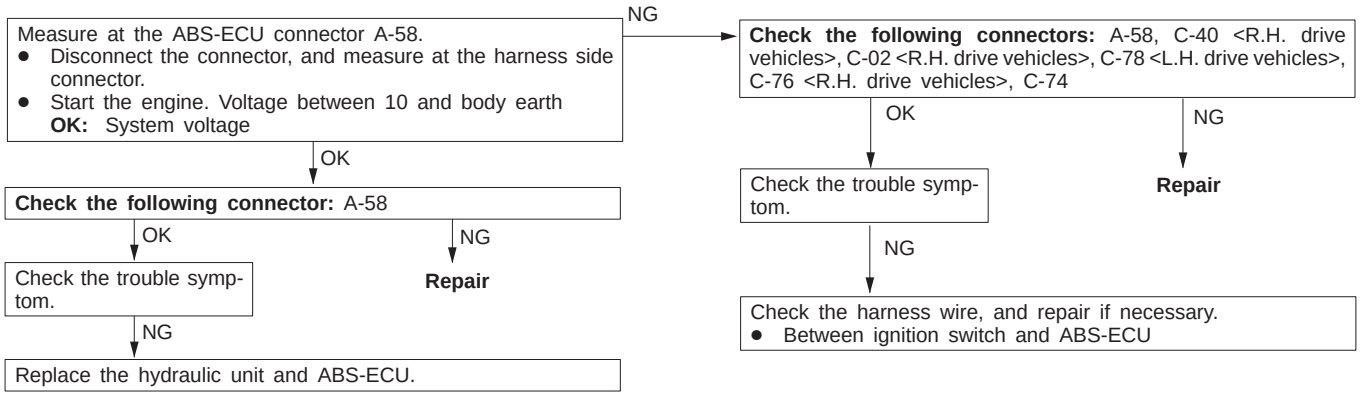

Code No.32 G sensor system	Probable cause
This code is output in the following cases. ● G sensor output voltage is less than 0.5 V or more than 4.5 V. (An open or short circuit is present in the G sensor circuit.) ● G sensor output voltage does not change. (G sensor output voltage is abnormal.)	● Malfunction of G sensor ● Malfunction of wiring harness or connector ● Malfunction of hydraulic unit and ABS-ECU

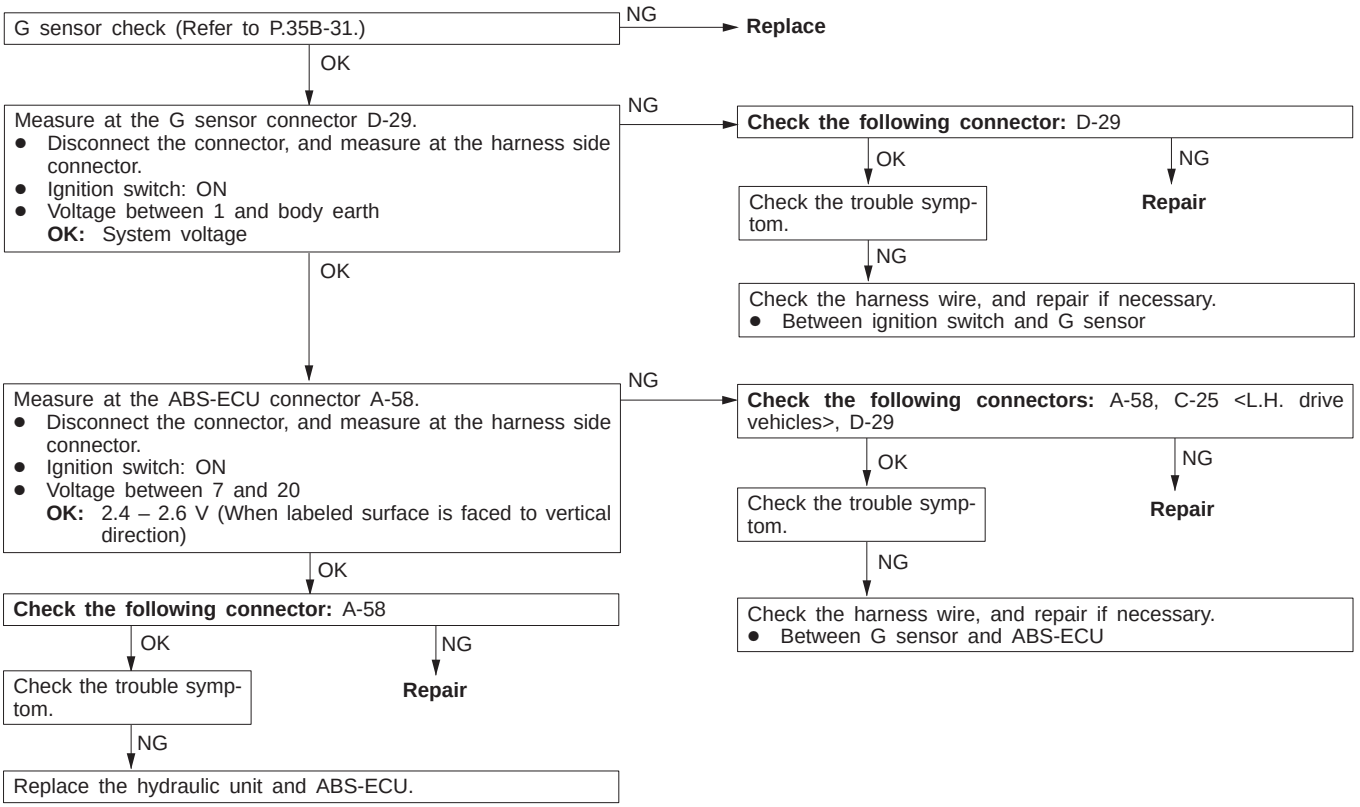

Code No.33 Stop lamp switch system	Probable cause
This code is output in the following cases. ● If the stop lamp switch is continuously on for 15 minutes or more even though the ABS system is not operating. ● If there is an open circuit in the stop lamp switch input circuit harness.	● Malfunction of stop lamp switch ● Malfunction of wiring harness or connector ● Malfunction of hydraulic unit and ABS-ECU

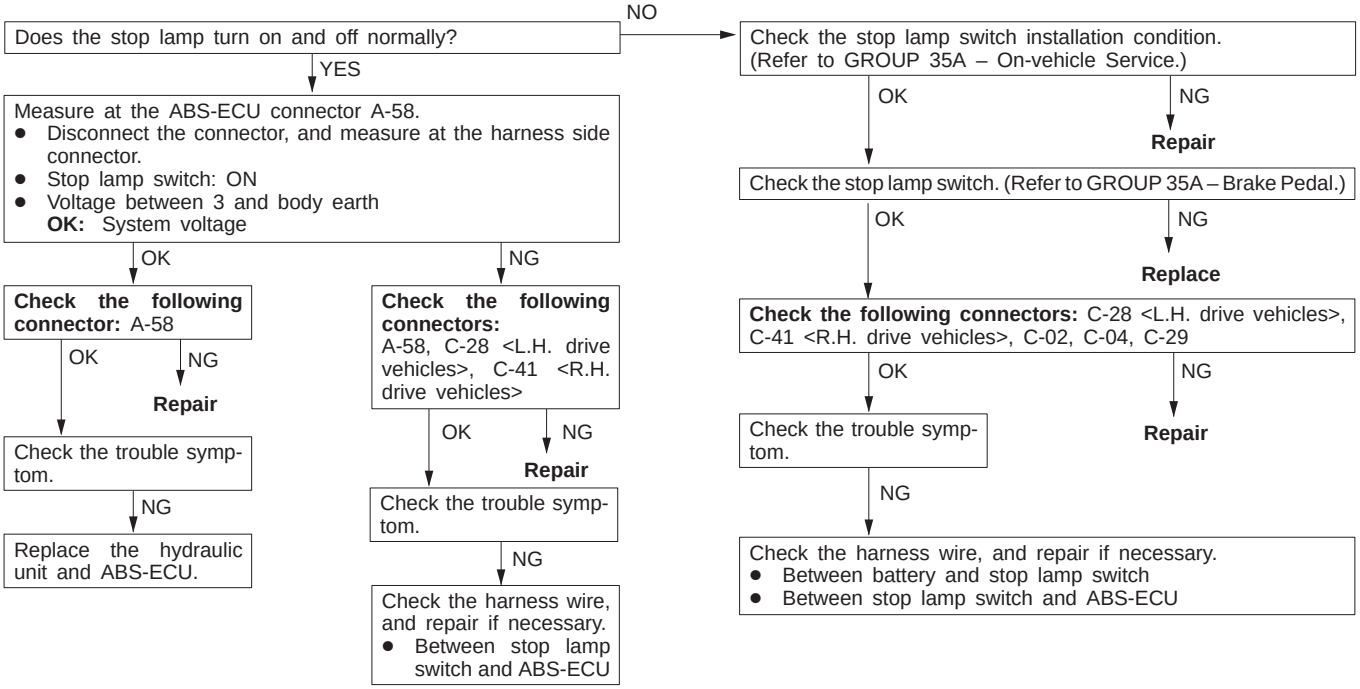

Code Nos.41, 42, 43 and 44 Solenoid valve	Probable cause
Code No.52 Valve relay problem (stays off)	
Code No.53 Motor relay problem (stays off)	
Code No.55 Motor system (seized pump motor)	
These codes are output if there is an open circuit or short-circuit in the ABS-ECU power supply circuit (power supply circuit for solenoid valve and motor), or the internal circuit in the hydraulic unit and ABS-ECU is defective.	● Malfunction of wiring harness or connector ● Malfunction of hydraulic unit and ABS-ECU

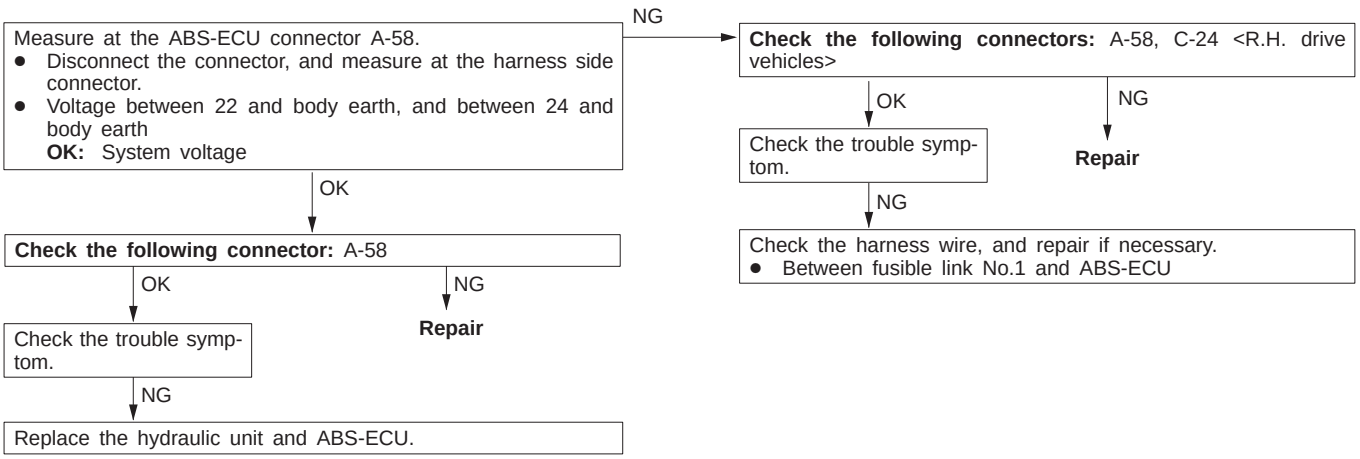

INSPECTION CHART FOR TROUBLE SYMPTOMS

Trouble symptoms	Inspection procedure No.	Reference page
Communication between the MUT-II and the whole system is not possible.	1	35B-14
Communication between the MUT-II and the ABS-ECU is not possible.	2	35B-15
When the ignition key is turned to "ON" (engine stopped), the ABS warning lamp does not illuminate.	3	35B-16
Even after the engine is started, the ABS warning lamp remains illuminated.	4	35B-17
Faulty ABS operation	5	35B-18

Caution

1. **If steering movements are made when driving at high speed, or when driving on road surfaces with low frictional resistance, or when passing over bumps, the ABS may operate even though sudden braking is not being applied. Because of this, when getting information from the customer, check if the problem occurred while driving under such conditions as these.**
2. **During ABS operation, the brake pedal may vibrate or may not be able to be depressed. Such phenomena are due to intermittent changes in hydraulic pressure inside the brake line to prevent the wheels from locking and is not an abnormality.**

INSPECTION PROCEDURE FOR TROUBLE SYMPTOMS

Inspection Procedure 1

Communication between the MUT-II and the whole system is not possible.	**Probable cause**
The cause may be a malfunction of the power supply circuit or the earth circuit of the diagnosis connector.	● Malfunction of diagnosis connector ● Malfunction of wiring harness or connector

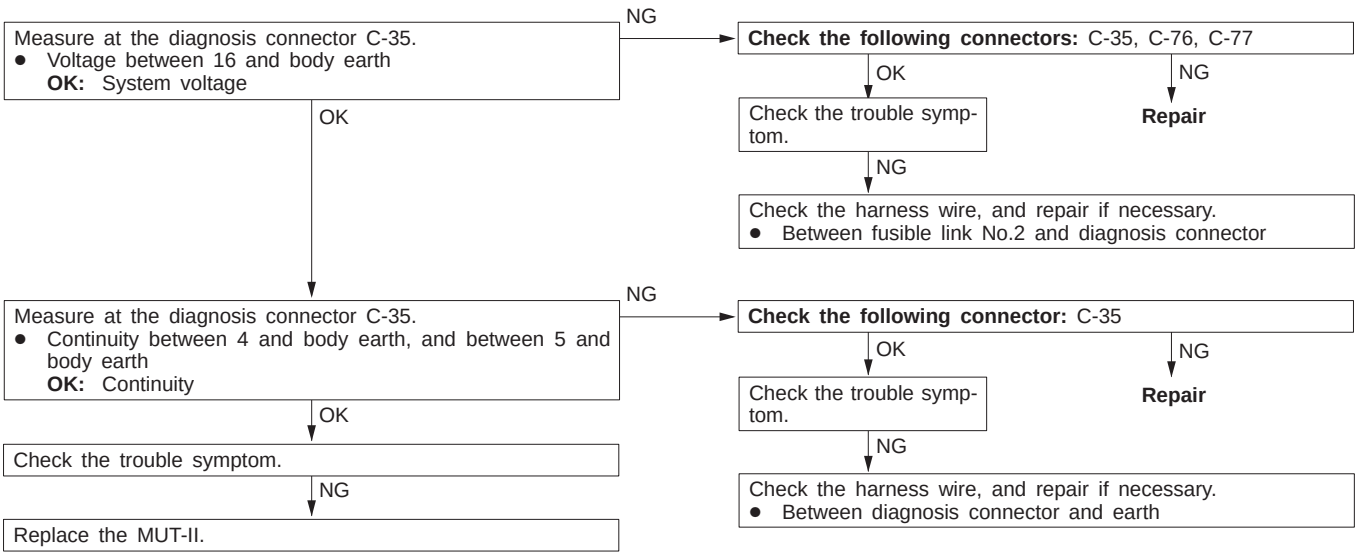

Inspection Procedure 2

Communication between MUT-II and the ABS-ECU is not possible.	Probable cause
The cause may be an open circuit in the ABS-ECU power supply circuit or an open circuit in the diagnosis output circuit.	• Blown fuse • Malfunction of wiring harness or connector • Malfunction of hydraulic unit and ABS-ECU

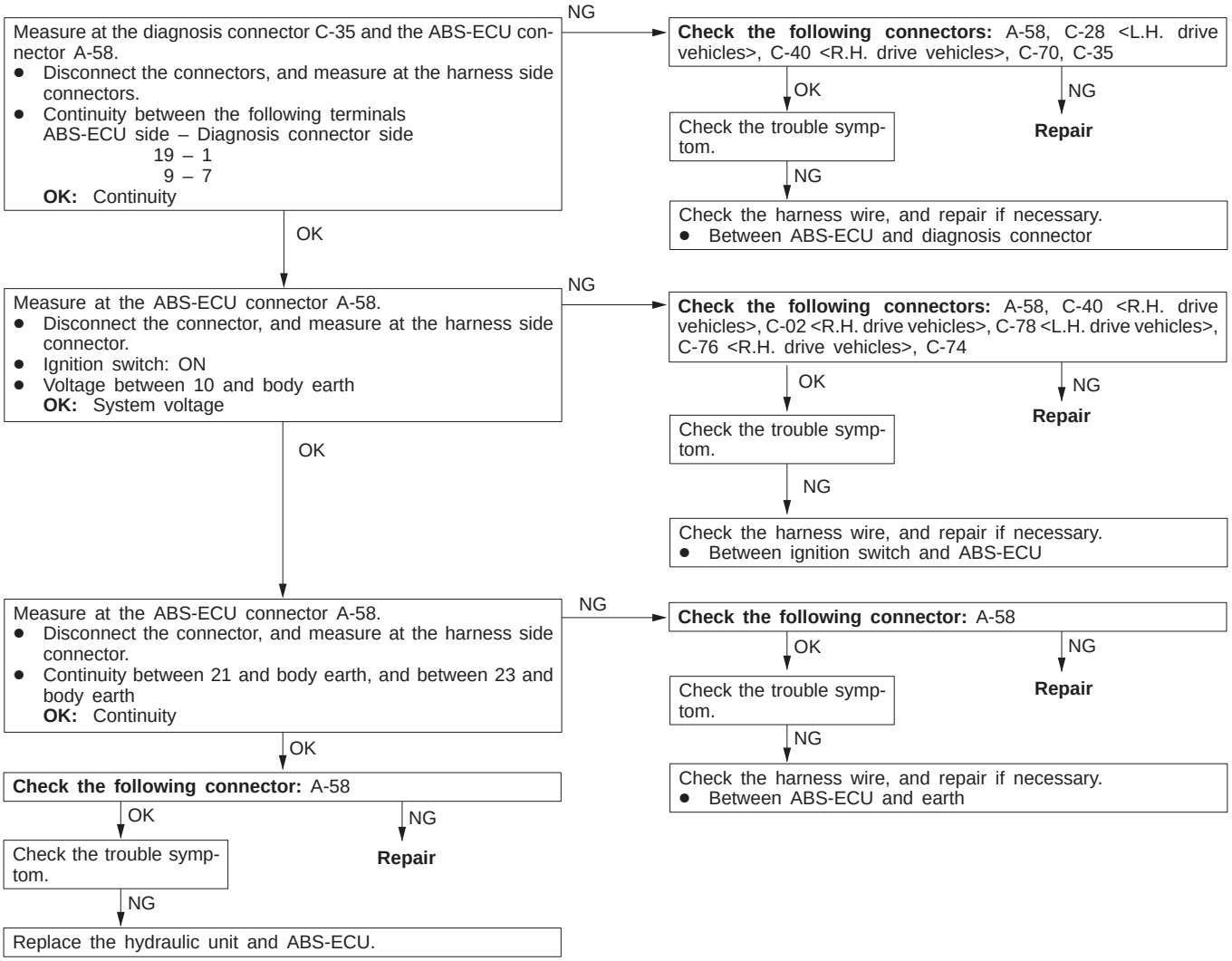

Inspection Procedure 3

When the ignition key is turned to "ON" (engine stopped), the ABS warning lamp does not illuminate.	Probable cause
The cause may be an open circuit in the lamp power supply circuit, a blown lamp, a malfunction of the ABS warning lamp relay or an open circuit between the ABS warning lamp and the earth.	• Blown fuse • Burn out ABS warning lamp bulb • Malfunction of ABS warning lamp relay • Malfunction of wiring harness or connector • Malfunction of hydraulic unit and ABS-ECU

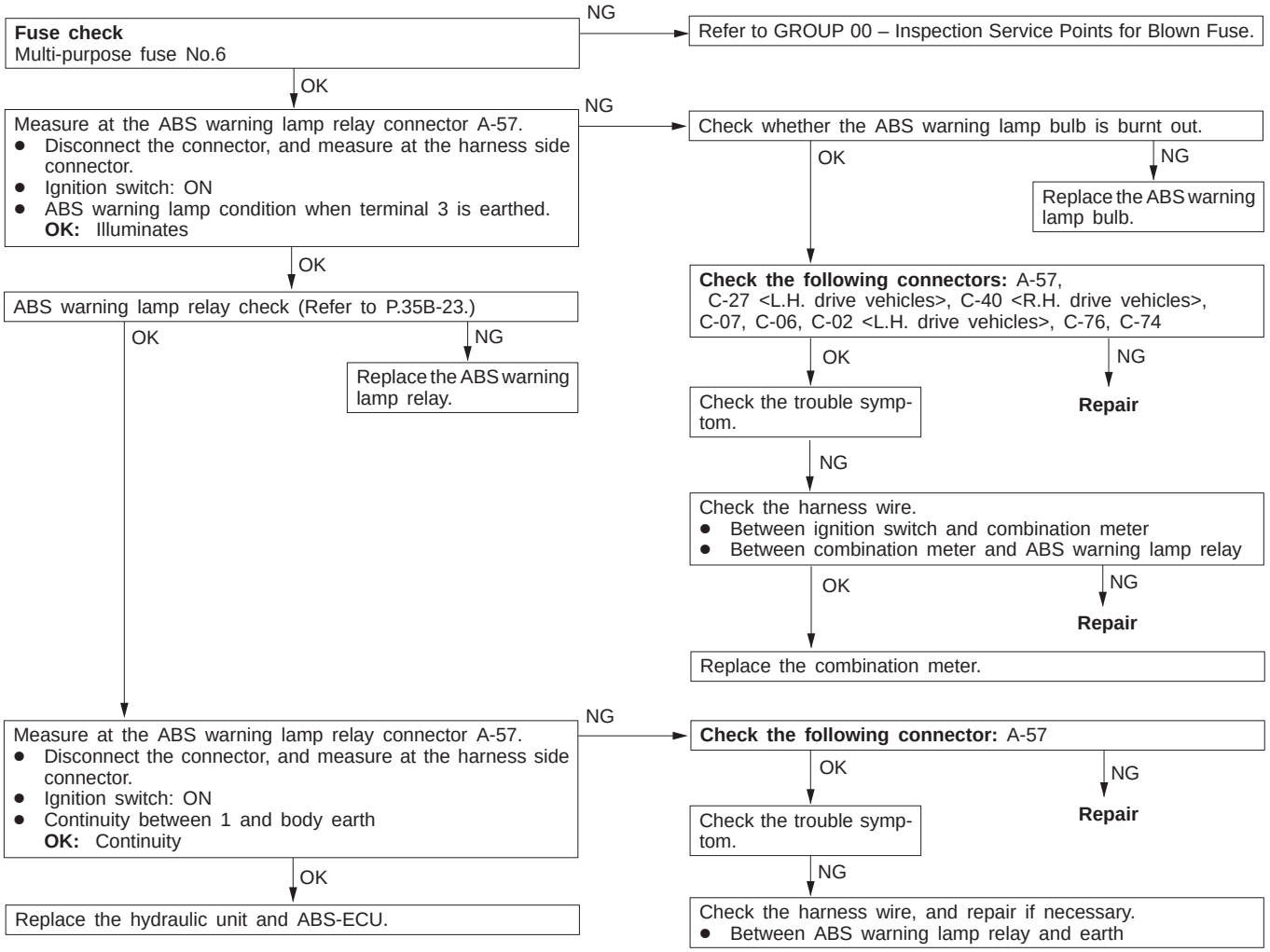

Inspection Procedure 4

Even after the engine is started, the ABS warning lamp remains illuminated.	Probable cause
The cause is probably a short-circuit in the ABS warning lamp illumination circuit.	● Malfunction of combination meter ● Malfunction of ABS warning lamp relay ● Malfunction of wiring harness (short circuit) ● Malfunction of hydraulic unit and ABS-ECU

NOTE
This trouble symptom is limited to cases where communication with the MUT-II is possible (ABS-ECU power supply is normal) and the diagnosis code is a normal diagnosis code.

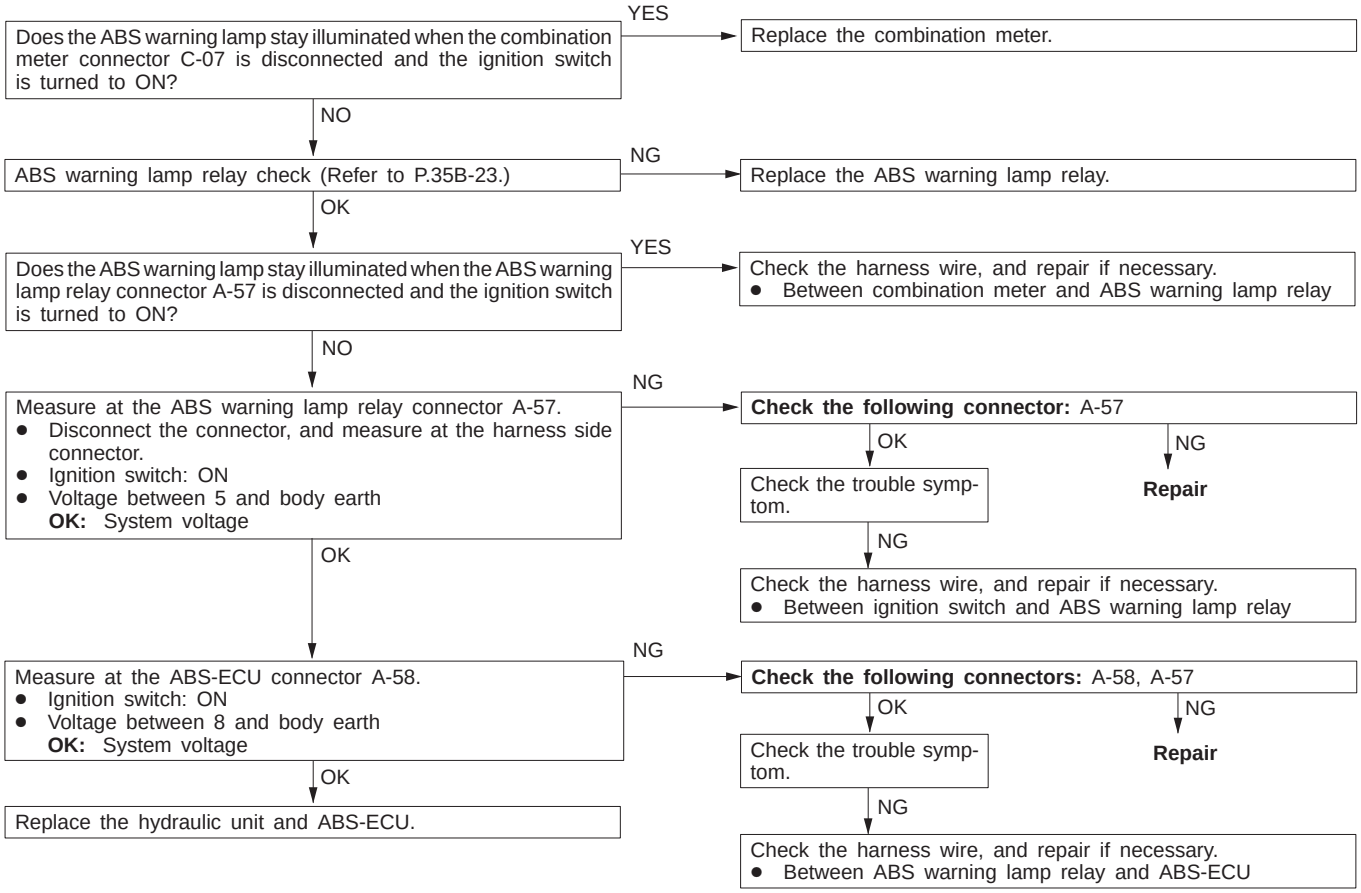

Inspection Procedure 5

Faulty ABS operation	Probable cause
This varies depending on the driving conditions and the road surface conditions, so problem diagnosis is difficult. However, if a normal diagnosis code is displayed, carry out the following inspection.	● Improper installation of wheel speed sensor ● Malfunction of wiring harness or connector ● Malfunction of wheel speed sensor ● Malfunction of ABS rotor ● Foreign material adhering to wheel speed sensor ● Malfunction of wheel bearing ● Malfunction of hydraulic unit and ABS-ECU

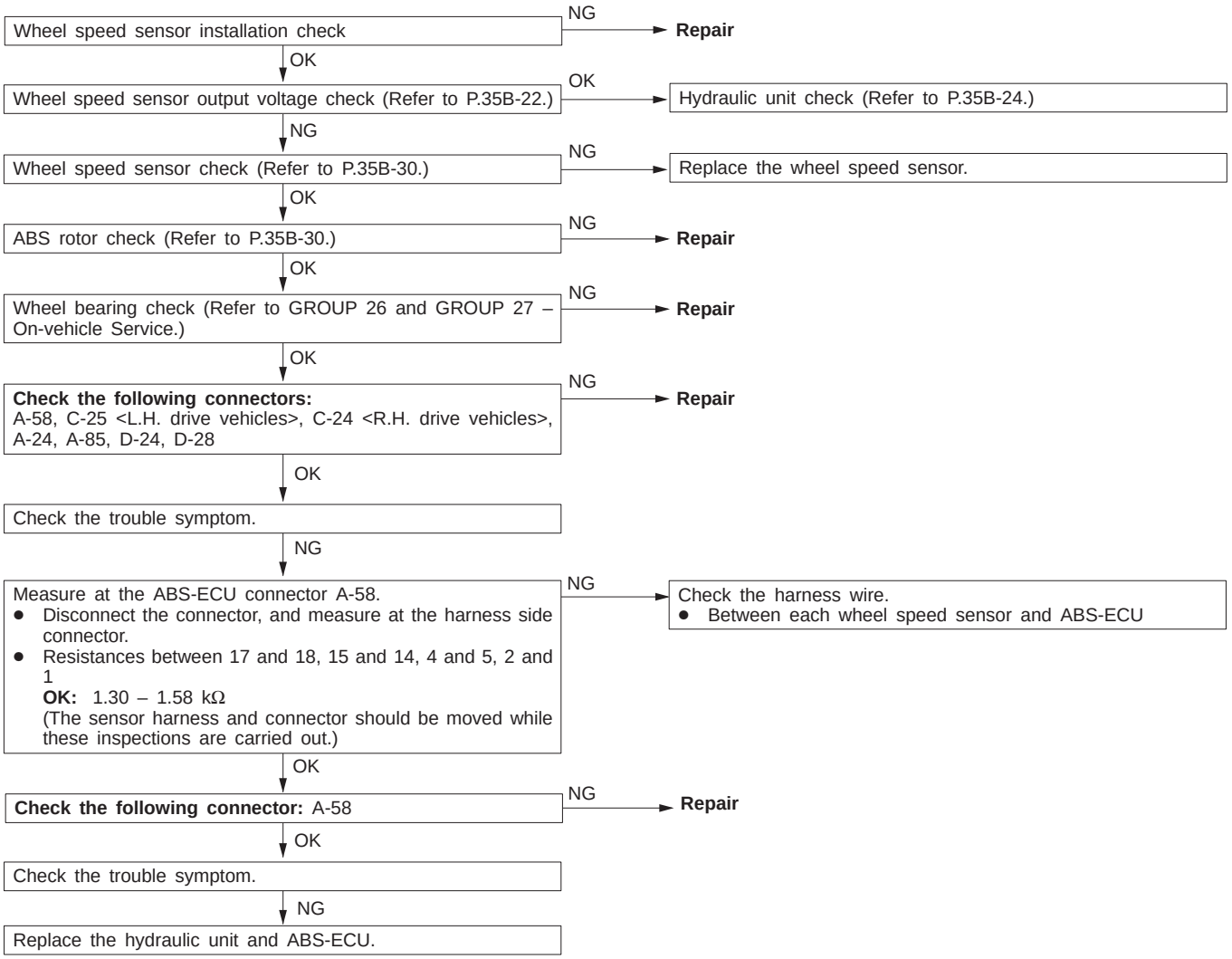

DATA LIST REFERENCE TABLE

The following items can be read by the MUT-II from the ABS-ECU input data.

1. When the system is normal

Item No.	Check item	Checking requirements	Normal value
11	Front-right wheel speed sensor	Perform a test run	Vehicle speeds displayed on the speedometer and MUT-II are identical.
12	Front-left wheel speed sensor		
13	Rear-right wheel speed sensor		
14	Rear-left wheel speed sensor		
16	ABS-ECU power supply voltage	Ignition switch: ON	9.2 – 17.5 V
32	G sensor	Vehicle is stopped.	2.4 – 2.6 V
		Vehicle is running.	0.5 – 4.5 V
33	Stop lamp switch	Depress the brake pedal.	ON
		Release the brake pedal.	OFF

2. When the ABS-ECU shut off ABS operation.

When the diagnosis system stops the ABS-ECU, the MUT-II display data will be unreliable.

ACTUATOR TEST REFERENCE TABLE

The MUT-II activates the following actuators for testing.

NOTE
1. If the ABS-ECU runs down, actuator testing cannot be carried out.
2. Actuator testing is only possible when the vehicle is stationary.

Activation pattern

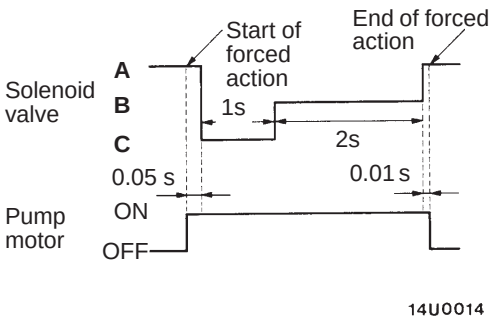

NOTE
A: Hydraulic pressure increase
B: Hydraulic pressure holds
C: Hydraulic pressure decrease

ACTUATOR TEST SPECIFICATIONS

No.	Item	
01	Solenoid valve for front-right wheel	Solenoid valves and pump motors in the hydraulic unit (simple inspection mode)
02	Solenoid valve for front-left wheel	
03	Solenoid valve for rear-right wheel	
04	Solenoid valve for rear-left wheel	

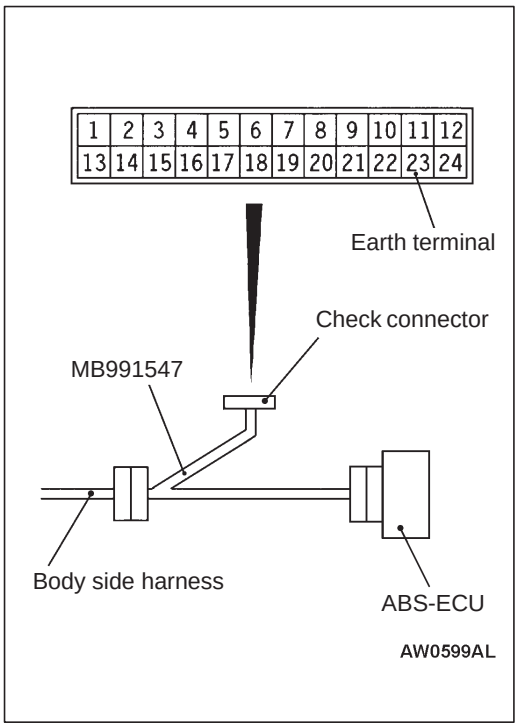

CHECK AT ABS-ECU

TERMINAL VOLTAGE CHECK CHART

1. Disconnect the ABS-ECU connector. (Refer to P. 35B-27.)
2. Use the special tool to measure the voltage between each terminal and earth (terminal No.23).
3. The terminal layout is shown in the illustration.

Terminal No.	Check item	Checking requirements		Normal condition
3	Stop lamp switch input	Ignition switch: ON	Stop lamp switch: ON	System voltage
			Stop lamp switch: OFF	1 V or less
7	Input from G sensor	Ignition switch: ON Vehicle is horizontal		2.4 – 2.6 V
8	ABS warning lamp relay transistor output	Ignition switch: ON	When the lamp is switched off	2 V or less
			When the lamp is illuminated	System voltage
9	MUT-II	When the MUT-II is connected		Serial communication with MUT-II
		When the MUT-II is not connected		1 V or less
10	ABS-ECU power supply	Ignition switch: ON		System voltage
		Ignition switch: START		0 V
19	Diagnosis changeover input	When the MUT-II is connected		0 V
		When the MUT-II is not connected		Approx. 12 V
20	G sensor earth	Always		0 V
22	Solenoid valve power supply	Always		System voltage
24	Motor power supply	Always		System voltage

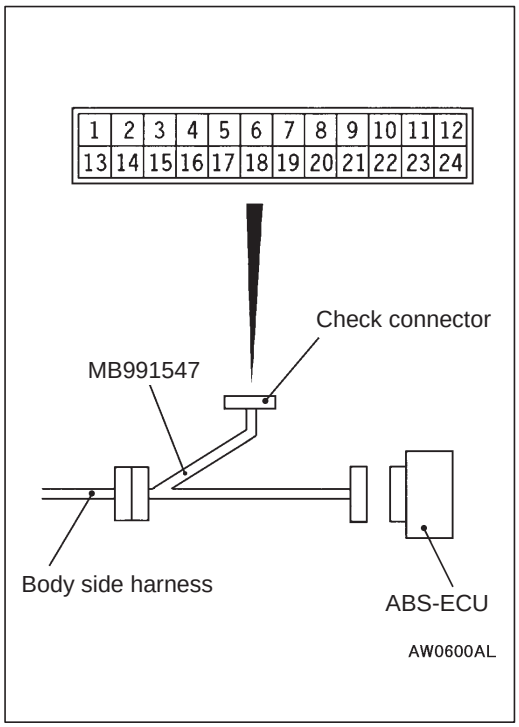

RESISTANCE AND CONTINUITY BETWEEN HARNESS-SIDE CONNECTOR TERMINALS

1. Turn the ignition key to the LOCK (OFF) position.
2. Disconnect the ABS-ECU connector. (Refer to P. 35B-27.)
3. Use the special tool to check the resistance and continuity between the terminals indicated in the table below.
4. The terminal layout is shown in the illustration.

ABS–ECU terminal No.	Signal	Normal condition
1 – 2	Wheel speed sensor (rear left)	1.30 – 1.58 kΩ
4 – 5	Wheel speed sensor (rear right)	
14 – 15	Wheel speed sensor (front left)	
17 – 18	Wheel speed sensor (front right)	
21 – Body earth	Earth	Continuity
23 – Body earth	Earth	

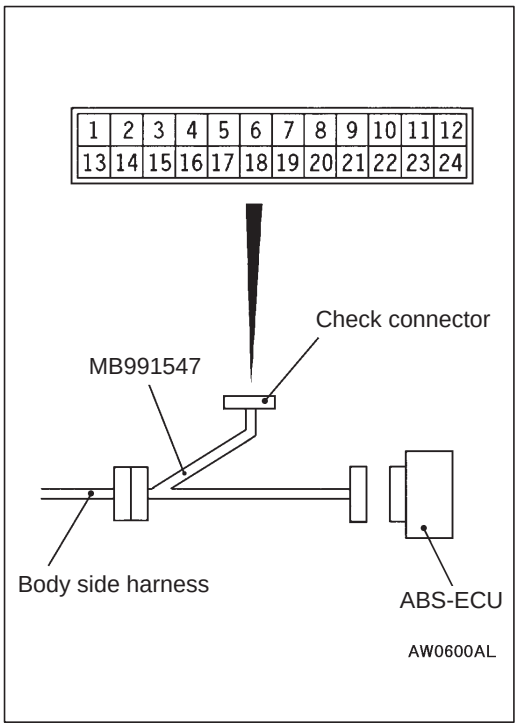

ON-VEHICLE SERVICE

WHEEL SPEED SENSOR OUTPUT VOLTAGE CHECK

1. Lift up the vehicle and release the parking brake.
2. Disconnect the ABS-ECU connector and then connect the special tool to the harness side connector. (Refer to P. 35B-27.)
3. Rotate the wheel to be measured at approximately 1/2 – 1 rotation per second, and check the output voltage using a circuit tester or an oscilloscope.

Wheel speed sensor	Front left	Front right	Rear left	Rear right
Terminal No.	15	17	2	4
	14	18	1	5

Output voltage

When measuring with a circuit tester:
42 mV or more

When measuring with an oscilloscope:
120 mV p-p or more

4. The followings are suspected if the output voltage is lower than the value described above. Check the wheel speed sensor, and replace if necessary.
   - Too large clearance between the pole piece of the wheel speed sensor and ABS rotor
   - Faulty wheel speed sensor

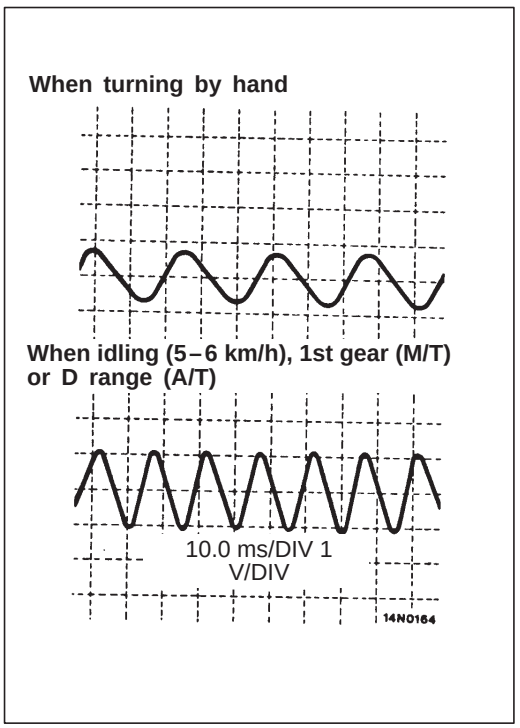

Inspecting Waveforms With An Oscilloscope

Use the following method to observe the output voltage waveform from each wheel speed sensor with an oscilloscope.

- Start the engine, and rotate the rear wheels by engaging 1st gear (vehicles with manual transmission) or D range (vehicles with automatic transmission). Turn the front wheels manually so that they rotate at a constant speed.

NOTE
1. The waveform measurements can also be taken while the vehicle is actually moving.
2. The output voltage will be small when the wheel speed is low, and similarly it will be large when the wheel speed is high.

Points In Waveform Measurement

Symptom	Probable causes	Remedy
Too small or zero waveform amplitude	Faulty wheel speed sensor	Replace sensor
Waveform amplitude fluctuates excessively (this is no problem if the minimum amplitude is 100 mV or more)	Axle hub eccentric or with large runout	Replace hub
	Faulty ABS-ECU earth	Repair
Noisy or disturbed waveform	Open circuit in sensor	Replace sensor
	Open circuit in harness	Correct harness
	Incorrectly mounted wheel speed sensor	Mount correctly
	ABS rotor with missing or damaged teeth	Replace ABS rotor

Caution
Because the wheel speed sensor cables move together with the front and rear suspension, they vibrate greatly when driving over poor road surfaces. As a result, the sensor harnesses should also be shaken when monitoring of output waveforms of the wheel speed sensors in order to simulate conditions such as driving over poor road surfaces.

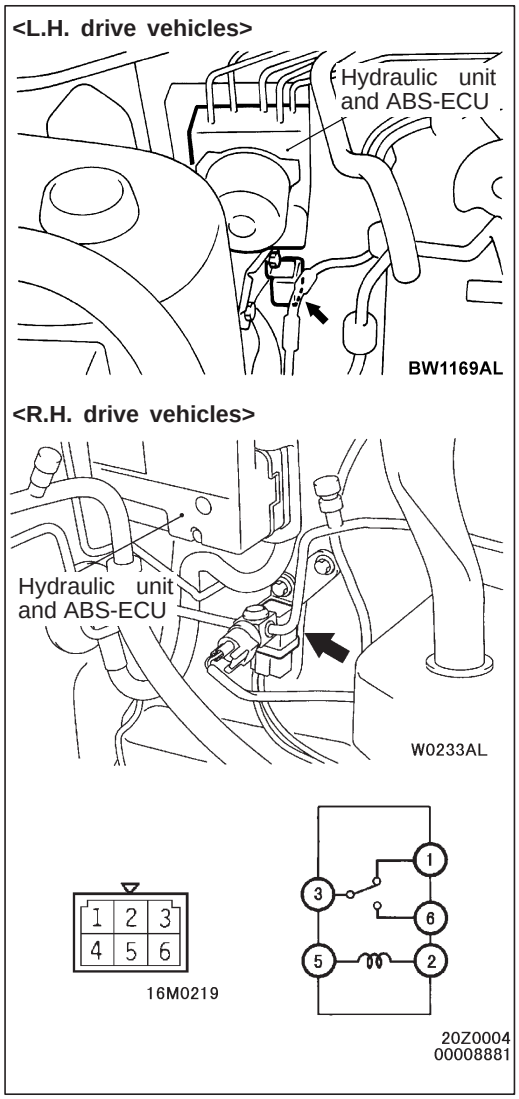

ABS WARNING LAMP RELAY CONTINUITY CHECK

Battery voltage	Terminal No.			
	1	2	3	5
Power is not supplied	○	○	○	○
Power is supplied	⊕		⊖	

HYDRAULIC UNIT CHECK

1. Jack up the vehicle and support the vehicle with rigid racks placed at the specified jack-up points or place the wheels which are checked on the rollers of the braking force tester.

   Caution
   (1) The roller of the braking force tester and the tyre should be dry during testing.
   (2) When testing the front brakes, apply the parking brake, and when testing the rear brakes, stop the front wheels by chocking them.

2. Turn the ignition key to the LOCK (OFF) position and set the MUT-II.

   Caution
   Turn the ignition key to the LOCK (OFF) position before connecting or disconnecting the MUT-II.

3. After checking that the shift lever <M/T> or the selector lever <A/T> is in neutral, start the engine.
4. Use the MUT-II to force-drive the actuator.

   NOTE
   (1) During the actuator test, the ABS warning lamp will illuminate and the anti-skid control will be cancelled.
   (2) When the ABS has been interrupted by the fail-safe function, the MUT-II actuator testing cannot be used.

5. Turn the wheel by hand and check the change in braking force when the brake pedal is depressed. When using the braking force tester, depress the brake pedal until the braking force is at the following values, and check that the braking force decreases when the actuator is force-driven.

Front wheel	785 – 981 N
Rear wheel	588 – 784 N

The result should be as shown in the following diagram.

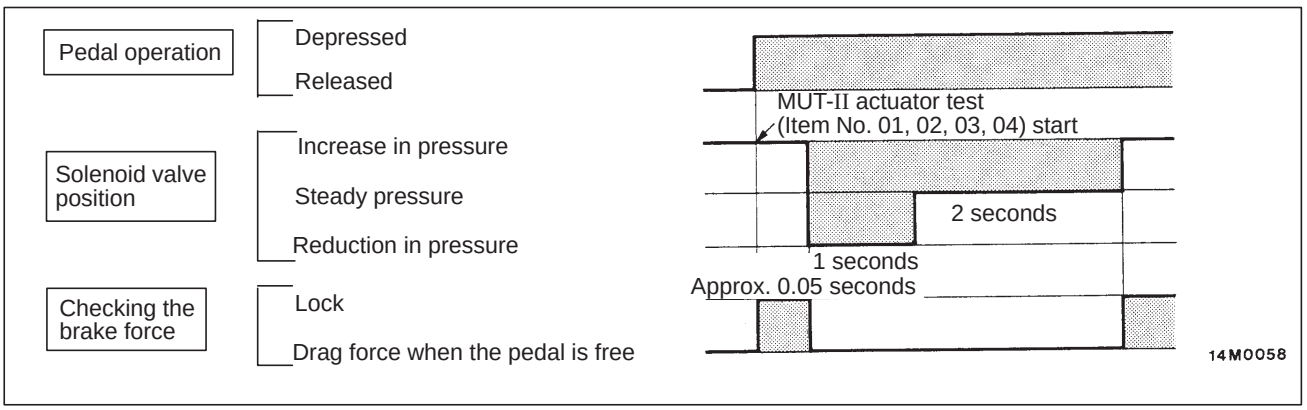

6. If the result of inspection is abnormal, correct according to the “Diagnosis Table”.

Diagnosis Table

No.	Operation	Judgement – Normal	Judgement – Abnormal	Probable cause	Remedy
01	(1) Depress brake pedal to lock wheel. (2) Using the MUT-II, select the wheel to be checked and force the actuator to operate. (3) Turn the selected wheel manually to check the change of brake force.	Brake force released for 3 seconds after locking.	Wheel does not lock when brake pedal is depressed.	Clogged brake line other than hydraulic unit	Check and clean brake line
02				Clogged hydraulic circuit in hydraulic unit	Replace hydraulic unit assembly
03			Brake force is not released	Incorrect hydraulic unit brake tube connection	Connect correctly
04				Hydraulic unit solenoid valve not functioning correctly	Replace hydraulic unit assembly

7. After inspection, disconnect the MUT-II immediately after turning the ignition switch to OFF.

REMEDY FOR A FLAT BATTERY

When booster cables are used to start the engine when the battery is completely flat and then the vehicle is immediately driven without waiting for the battery to recharge itself to some extent, the engine may misfire, and driving might not be possible.
This happens because ABS consumes a great amount of current for its self-check function; the remedy is to either allow the battery to recharge sufficiently, or to disconnect the ABS-ECU connector, thus disabling the anti-skid brake system.
The ABS warning lamp will illuminate when the ABS-ECU connector is disconnected.
After the battery has sufficiently recharged, connect the ABS-ECU connector and restart the engine; then check to be sure the ABS warning lamp is not illuminated.

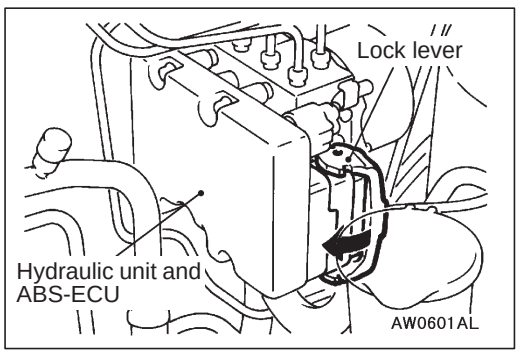

DISCONNECTING ABS-ECU CONNECTOR

Move the lock lever of the ABS-ECU connector as shown in the illustration, and then disconnect the ABS-ECU connector.

HYDRAULIC UNIT AND ABS-ECU

REMOVAL AND INSTALLATION

Pre-removal Operation
- Brake Fluid Draining
- Air Cleaner Removal (Refer to GROUP 15.)

Post-installation Operation
- Brake Fluid Supplying and Brake Line Bleeding (Refer to GROUP 35A – On-vehicle Service.)
- Hydraulic Unit Inspection (Refer to P.35B-24.)
- Air Cleaner Installation (Refer to GROUP 15.)

<L.H. drive vehicles>

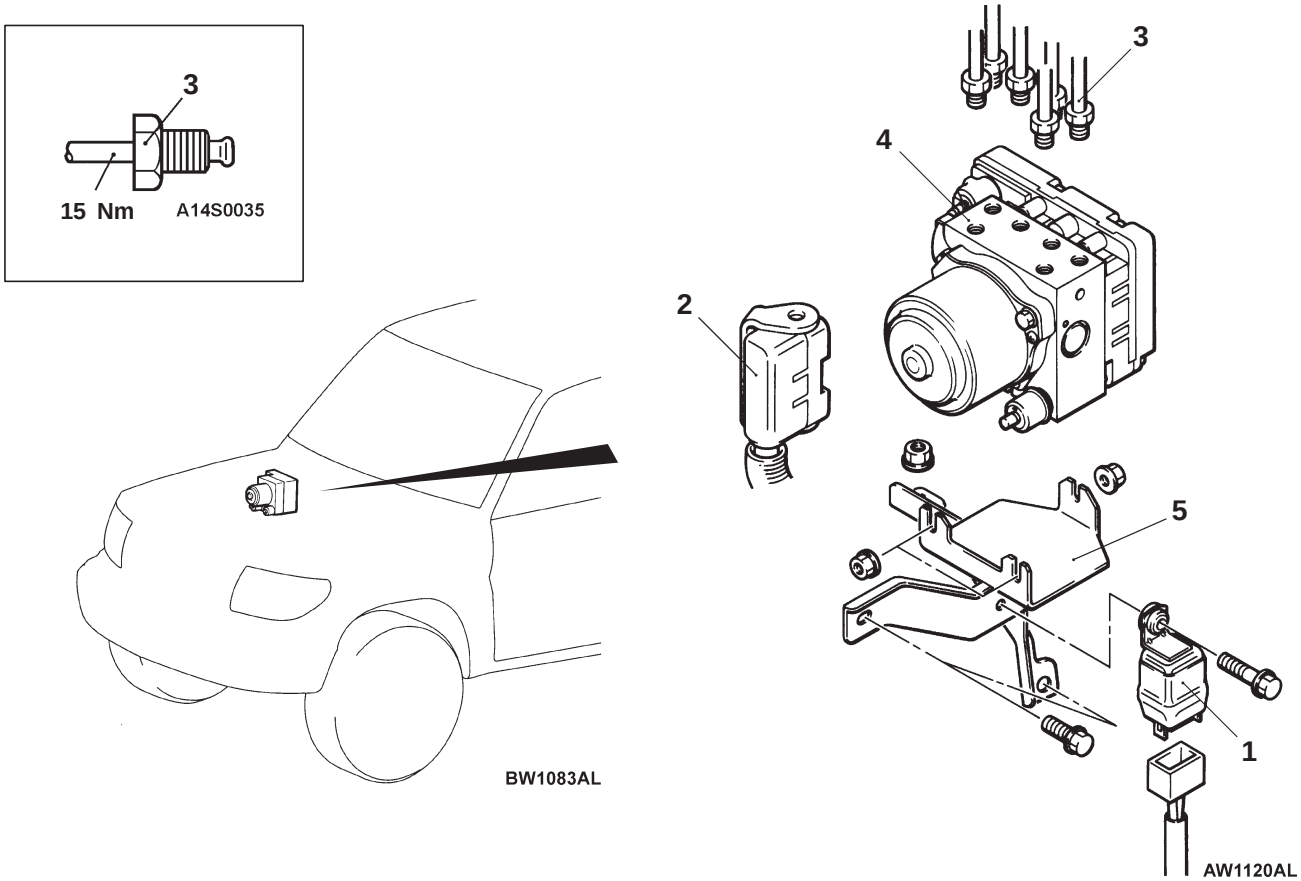

<R.H. drive vehicles>

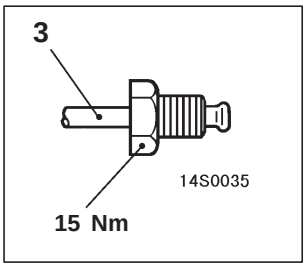

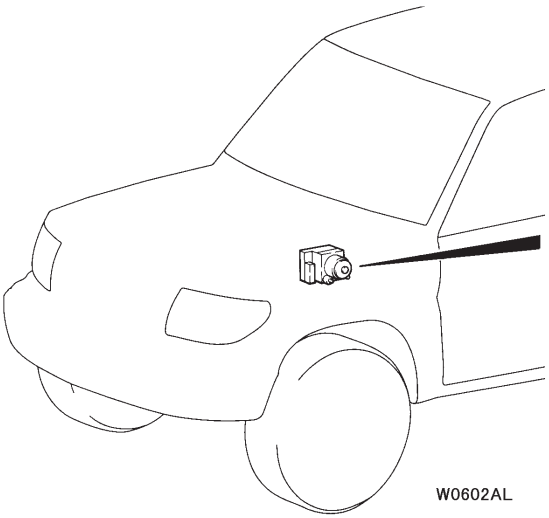

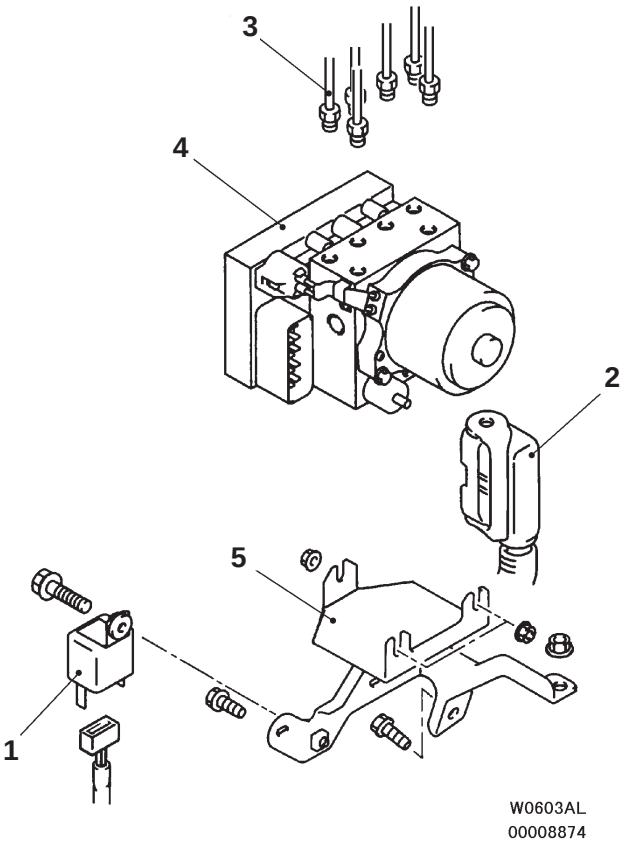

Removal steps

1. ABS warning lamp relay
2. Harness connector
3. Brake pipe connection

◀A▶ ▶A◀

◀B▶

4. Hydraulic unit and ABS-ECU
5. Hydraulic unit bracket assembly

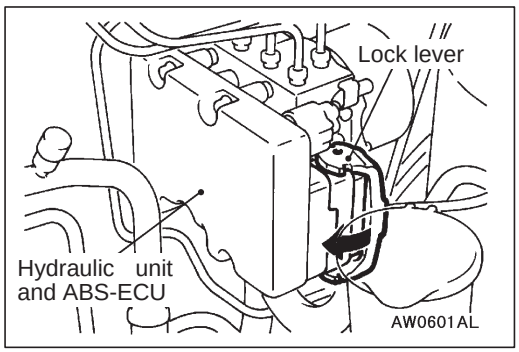

REMOVAL SERVICE POINTS

◀A▶ HARNESS CONNECTOR DISCONNECTION

Move the lock lever of the ABS-ECU connector as shown in the illustration, and then disconnect the harness connector.

◀B▶ HYDRAULIC UNIT AND ABS-ECU REMOVAL

Caution

1. **The hydraulic unit assembly is heavy, and so care should be taken when removing it.**
2. **The hydraulic unit assembly is not to be disassembled; its nuts and bolts should absolutely not be loosened.**
3. **The hydraulic unit assembly must not be dropped or otherwise subjected to impact shocks.**
4. **The hydraulic unit assembly must not be turned upside down or laid on its side.**

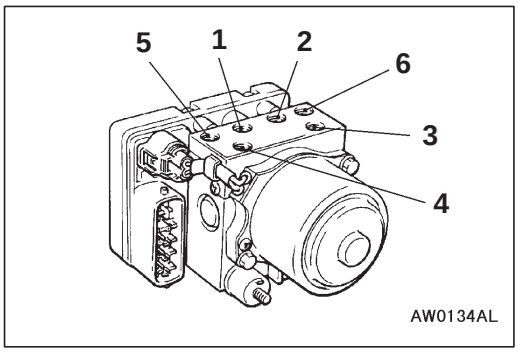

INSTALLATION SERVICE POINT

▶A◀ BRAKE PIPE CONNECTION

Connect the pipes to the hydraulic unit assembly as shown in the illustration.

1. To the proportioning valve (Rear brake, LH)
2. To the proportioning valve (Rear brake, RH)
3. From the master cylinder (Primary)
4. From the master cylinder (Secondary)
5. To the front brake (RH)
6. To the front brake (LH)

WHEEL SPEED SENSOR

REMOVAL AND INSTALLATION

Post-installation Operation
Wheel Speed Sensor Output Voltage Check
(Refer to P.35B-22.)

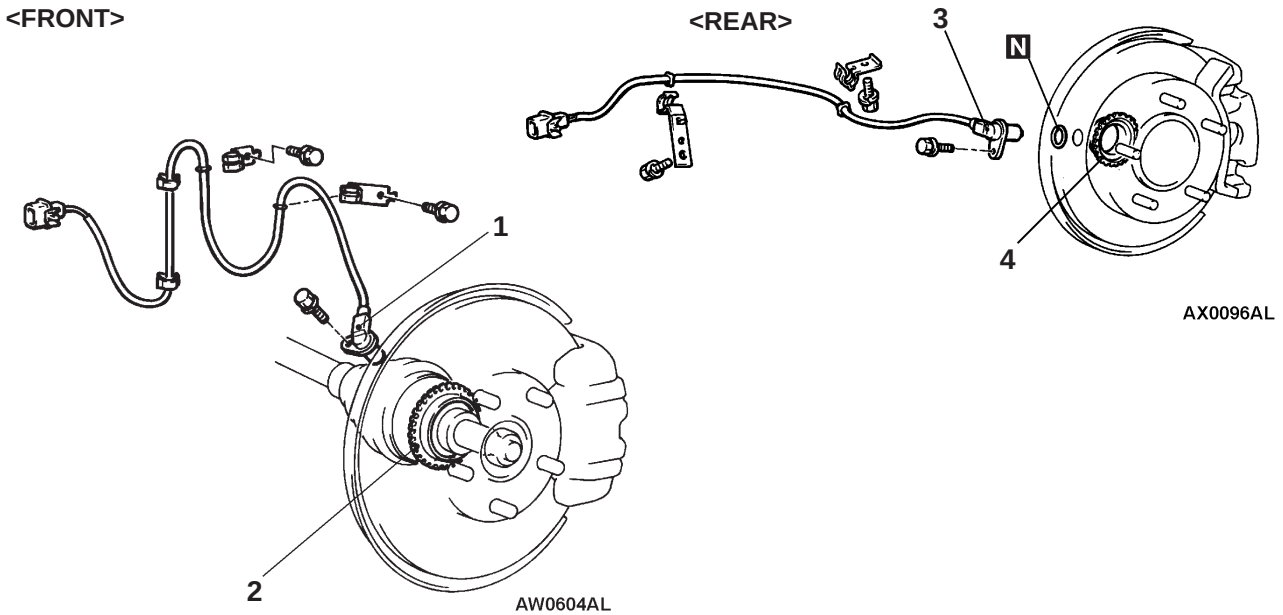

◀A▶ 1. Front wheel speed sensor
2. Front ABS rotor (Refer to GROUP 26 – Drive Shaft.)
◀A▶ 3. Rear wheel speed sensor
4. Rear ABS rotor (Refer to GROUP 27 – Axle Shaft.)

NOTE
The front ABS rotor is integrated with the drive shaft. Do not disassemble it.

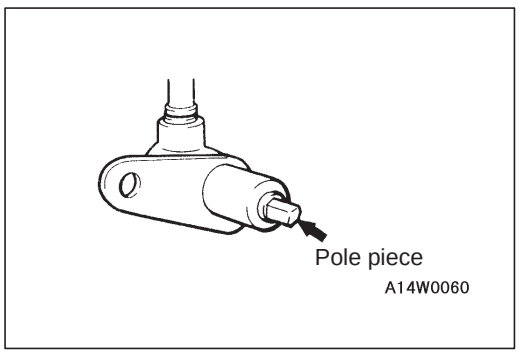

REMOVAL SERVICE POINT

◀A▶ FRONT WHEEL SPEED SENSOR/REAR WHEEL SPEED SENSOR REMOVAL

Caution
Do not strike the pole piece at the tip of the wheel speed sensor against the ABS rotor tooth surface or other parts when removing the wheel speed sensor.

INSPECTION

CHECK OF RESISTANCE BETWEEN WHEEL SPEED SENSOR TERMINALS

Caution

The pole piece can become magnetized because of the magnet built into the wheel speed sensor, with the result that metallic foreign material easily adheres to it. Moreover, the pole piece may not be able to function to correctly sense the wheel rotation speed if it is damaged.

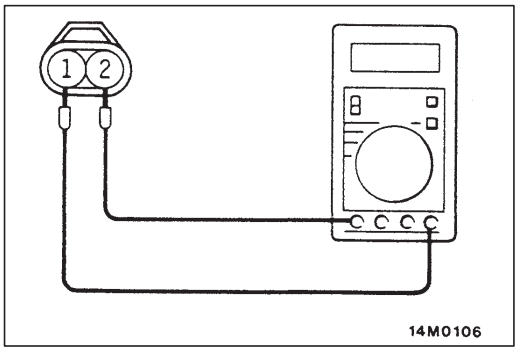

1. Measure the resistance between the wheel speed sensor terminals.

   Standard value: 1.30 – 1.58 kΩ

   If the internal resistance of the wheel speed sensor is not within the standard value, replace with a new wheel speed sensor.

2. Check the wheel speed sensor cable for breakage, damage or disconnection; replace with a new one if a problem is found.

   NOTE
   When checking for cable damage, remove the cable clamp part from the body and then bend and pull the cable near the clamp to check whether or not temporary disconnection occurs.

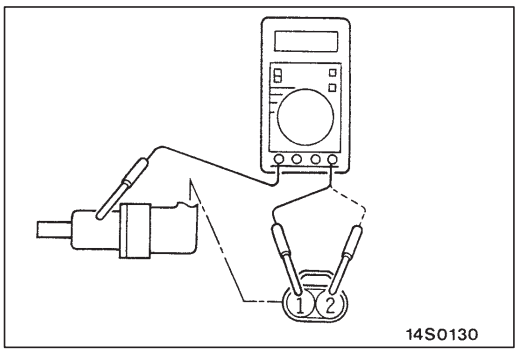

WHEEL SPEED SENSOR INSULATION INSPECTION

1. Remove all connections from the wheel speed sensor, and then measure the resistance between terminals 1 and 2 and the body of the wheel speed sensor.

   Standard value: 100 kΩ or more

2. If the speed sensor insulation resistance is outside the standard value range, replace with a new speed sensor.

ABS ROTOR CHECK

Check whether ABS rotor teeth are broken or deformed, and, if so, replace the B.J. assembly or the ABS rotor.

G SENSOR

REMOVAL AND INSTALLATION

Caution
Do not drop the G sensor or subject it to any shocks.

Pre-removal and Post-installation Operation
Rear floor console removal and installation
(Refer to Group 52A.)

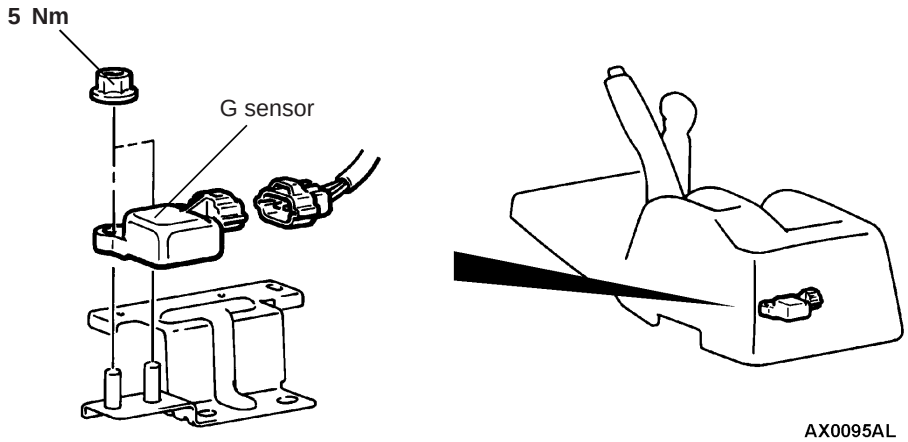

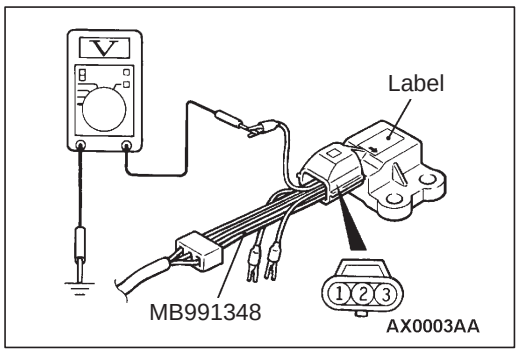

INSPECTION

1. Remove the G sensor.
2. Connect the special tool between the disconnected connectors, and then place the G sensor horizontally as shown in the illustration.
3. Turn on the ignition switch, and then measure the voltage between terminal No.2 and body earth.

   Standard value: 2.4 – 2.6 V

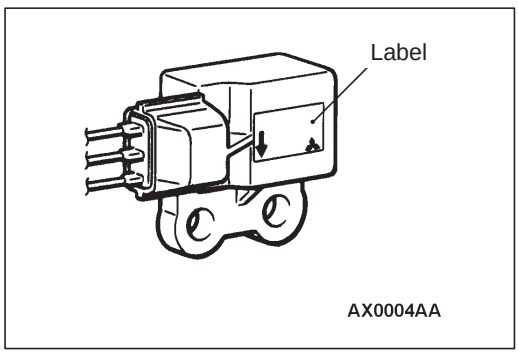

4. Face the labeled surface straight down with the special tool still connected. Measure the voltage between terminal No.2 and body earth with the labeled surface faced straight down.

   Standard value: 3.3 – 3.7 V

5. If not within the standard value, check the power supply line and earth condition, and then replace the G sensor.

NOTES

ANTI-SKID BRAKING SYSTEM (ABS) <4WD>

CONTENTS

GENERAL

OUTLINE OF CHANGES

- The hydraulic unit (integrated with the ABS-ECU) has been reshaped. In addition, the troubleshooting has been changed due to the change on the ABS-ECU connector.
- The Electronic Brake-force Distribution (EBD) has been adopted. The EBD makes it possible to maintain the maximum amount of braking force for the rear wheels even when the vehicle's load is unevenly distributed

GENERAL INFORMATION

EBD CONTROL

In ABS, electronic control method is used whereby the rear wheel brake hydraulic pressure during braking is regulated by rear wheel control solenoid valves in accordance with the vehicle's rate of deceleration and the front and rear wheel slippage which are calculated from the signals received from the various wheel sensors. EBD control is a control system which provides a high level of control for both vehicle braking force and vehicle stability. The system has the following features.

- Because the system provides the optimum rear wheel braking force regardless of the vehicle laden condition and the condition of the road surface, the system reduces the required pedal depression force, particularly when the vehicle is heavily laden or driving on road surfaces with high frictional coefficients.
- Because the duty placed on the front brakes has been reduced, the increases in pad temperature can be controlled during front brakes applying to improve the wear resistance characteristics of the pad.
- Control valves such as the proportioning valve are no longer required.

HYDRAULIC UNIT

New

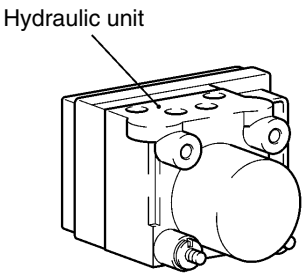

AY0103AL

Old

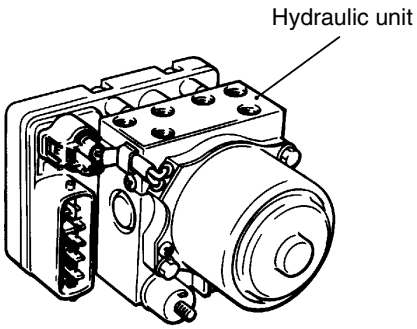

AW0134AL

ABS-ECU

EBD HYDRAULIC PRESSURE CONTROL

The procedures are the same as that used in PAJERO except for the items shown below.

Item	PAJERO-PININ	PAJERO
EBD control condition	When the difference between the rear wheel speed and the vehicle speed exceeds the set value.	When the difference between the rear wheel speed and the front wheel speed exceeds the set value.

<PAJERO-PININ>

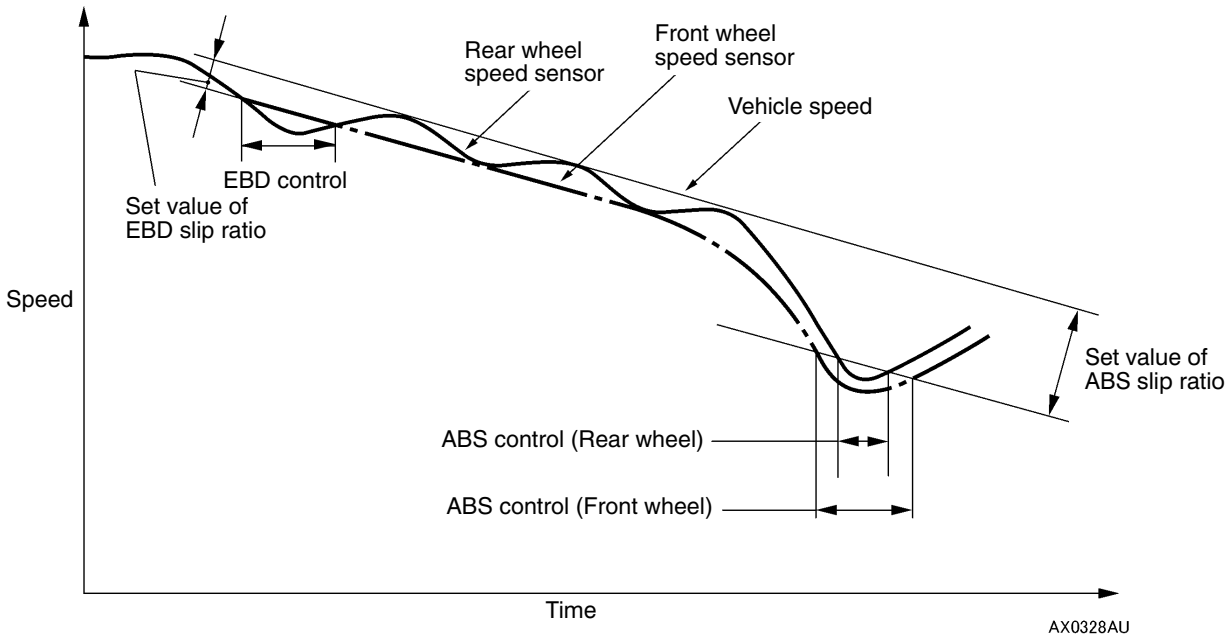

<PAJERO>

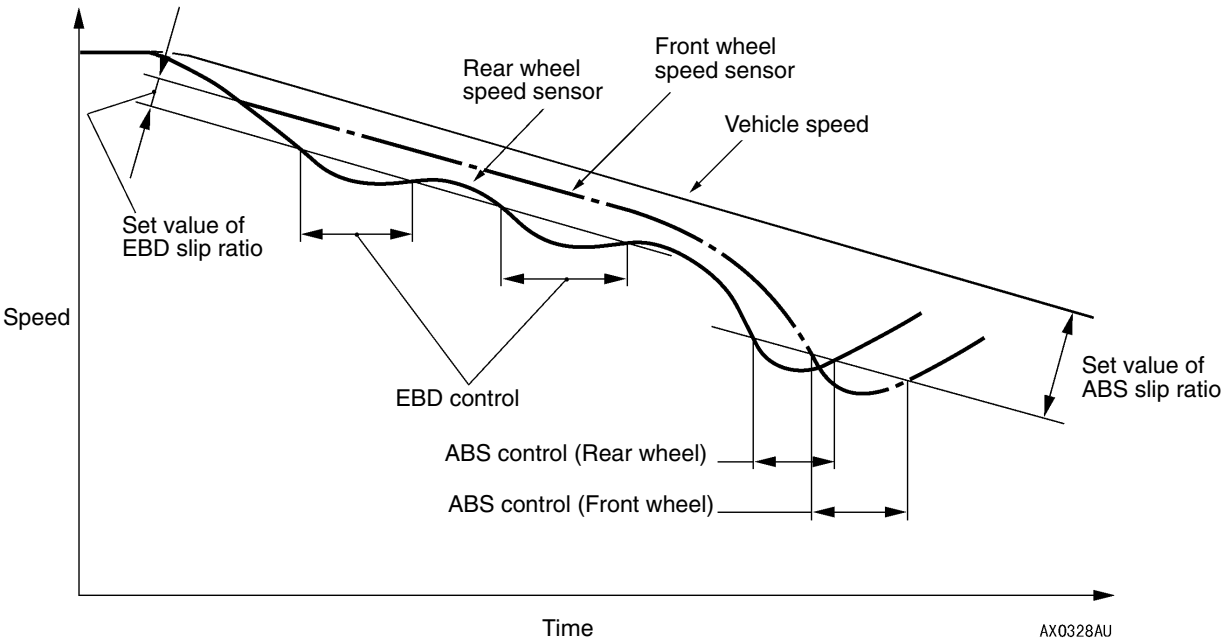

FAIL-SAFE FUNCTION

The procedures are the same as that used in PAJERO except for the items shown below.

Item	PAJERO-PININ	PAJERO
Warning lamp during fail-safe operation	ABS warning lamp	Brake warning lamp

Diagnosis code No.	Item	Action during fail-safe operation		
		ABS control	EBD control	ABS warning lamp
11	Open circuit or short-circuit in wheel speed sensor (FR)	If faulty wheels include two rear wheels: Control stopped in all wheels Other than the above: Control stopped in faulty wheels	If faulty wheels include two rear wheels: Control stopped Other than the above: Control carried out	Illuminated
12	Open circuit or short-circuit in wheel speed sensor (FL)			
13	Open circuit or short-circuit in wheel speed sensor (RR)			
14	Open circuit or short-circuit in wheel speed sensor (RL)			
15	Problem with any one of the four wheel speed sensors			
16	Abnormal drop or rise in ABS-ECU power supply voltage	Control stopped	Control stopped	Illuminated
21	Wheel speed sensor (FR) system	If faulty wheels include two rear wheels: Control stopped in all wheels Other than the above: Control stopped in faulty wheels	If faulty wheels include two rear wheels: Control stopped Other than the above: Control carried out	Illuminated
22	Wheel speed sensor (FL) system			
23	Wheel speed sensor (RR) system			
24	Wheel speed sensor (RL) system			
32	G sensor system	Control stopped	Control carried out	Illuminated
33	Stop lamp switch system	Control stopped	Control carried out	Illuminated
41	Solenoid valve (FR) system	System interrupted	System interrupted	Illuminated
42	Solenoid valve (FL) system			
43	Solenoid valve (RR) system			
44	Solenoid valve (RL) system			
51	Valve relay ON problem	Control stopped	Control carried out	Illuminated
52	Valve relay OFF problem	System interrupted	System interrupted	Illuminated
53	Motor relay OFF problem	Control stopped	Control carried out	Illuminated
54	Motor relay ON problem	System interrupted	Control carried out	Illuminated
55	Motor system	Control stopped	Control carried out	Illuminated
63	ABS-ECU abnormality	System interrupted	System interrupted	Illuminated

NOTE
Control stopped: Control is not carried out until the ignition switch is turned to the “LOCK” (OFF) position. However, if the problem returns to normal, control is carried out again.
System interrupted: Control is not carried out until the valve relay turns off and the ignition switch is turned to the “LOCK” (OFF) position.

TROUBLESHOOTING

INSPECTION CHART FOR DIAGNOSIS CODES

Diagnosis code No.	Inspection item		Reference page
11	Front right wheel speed sensor (Open circuit or short circuit)		35B-6
12	Front left wheel speed sensor (Open circuit or short circuit)		35B-6
13	Rear right wheel speed sensor (Open circuit or short circuit)		35B-6
14	Rear left wheel speed sensor (Open circuit or short circuit)		35B-6
15	Wheel speed sensor (Abnormal output signal)		–
16*	ABS-ECU power supply system (Abnormal voltage drop or rise)		35B-7
21	Front right wheel speed sensor		35B-6
22	Front left wheel speed sensor		35B-6
23	Rear right wheel speed sensor		35B-6
24	Rear left wheel speed sensor		35B-6
32	G sensor system		35B-7
33	Stop lamp switch system		–
41	Front right solenoid valve	The diagnosis codes are output when there is no response to the drive signals for respective solenoid valves or the ABS-ECU power supply system is defective.	35B-8
42	Front left solenoid valve		
43	Rear right solenoid valve		
44	Rear left solenoid valve		
51	Valve relay problem (stays on)		–
52	Valve relay problem (stays off) or ABS-ECU power supply system problem		35B-8
53	Motor relay problem (stays off) or ABS-ECU power supply system problem		
54	Motor relay problem (stays on)		–
55	Motor system (seized pump motor) or ABS-ECU power supply system problem		35B-8
63	ABS-ECU		–

NOTE
*: Turning the ignition switch to ACC will erase the diagnosis code No.16.

INSPECTION PROCEDURE FOR DIAGNOSIS CODES

Code Nos.11, 12, 13 and 14 Wheel speed sensor (open circuit or short circuit) Code Nos.21, 22, 23 and 24 Wheel speed sensor	Probable cause
Code Nos. 11, 12, 13 and 14 are output if the ABS-ECU detects an open circuit or short-circuit in the (+) wire or (–) wire in any one of the four wheel speed sensors.	• Malfunction of wheel speed sensor • Malfunction of wiring harness or connector • Malfunction of hydraulic unit and ABS-ECU
Code Nos. 21, 22, 23 and 24 are output in the following cases. • When there is no input from any one of the four wheel speed sensors when travelling at several km/h or more, even though open circuit can not be verified. • When a chipped or blocked-up ABS rotor is detected and if the anti-lock system operates continuously because a malfunctioning sensor or a warped ABS rotor is causing sensor output to drop.	• Malfunction of wheel speed sensor • Malfunction of wiring harness or connector • Malfunction of ABS rotor • Too much gap between the sensor and the ABS rotor • Malfunction of hydraulic unit and ABS-ECU • Malfunction of wheel bearing

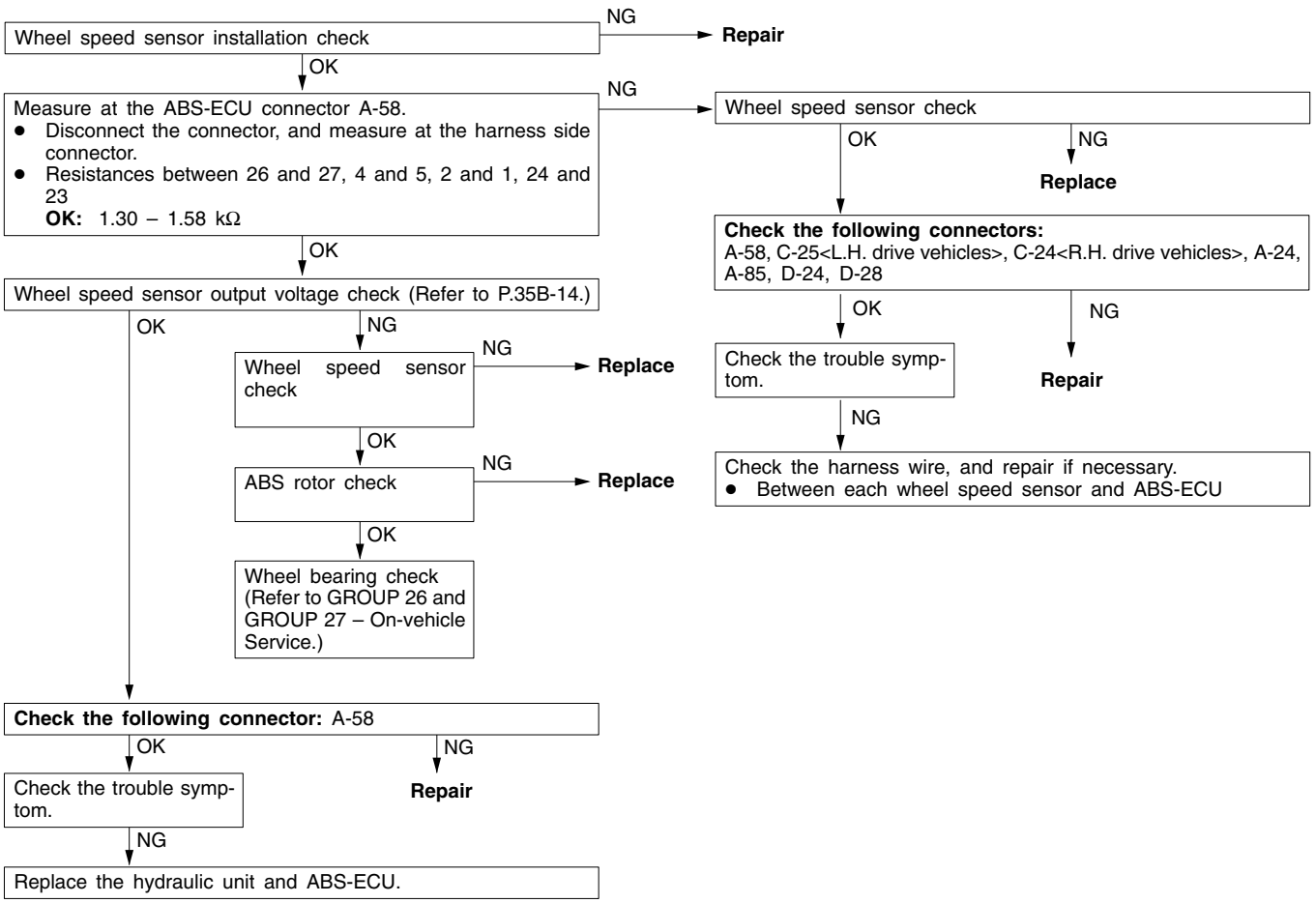

Code No.16 ABS-ECU power supply system (abnormal voltage drop or rise)	Probable cause
This code is output if the ABS-ECU power supply voltage drops below or rises above the rated values. Furthermore, turning the ignition switch to ACC will erase this code.	• Malfunction of battery • Malfunction of wiring harness or connector • Malfunction of hydraulic unit and ABS-ECU

Caution

If battery voltage drops or rises during inspection, this code will be output as well. If the voltage returns to standard value, this code is no longer output.

Before carrying out the following inspection, check the battery level, and refill it if necessary.

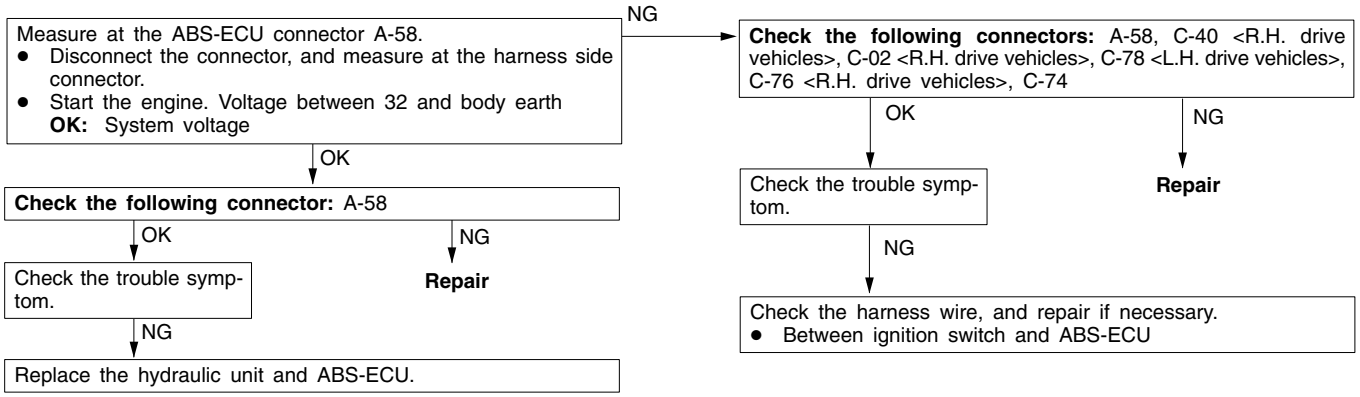

Code No.32 G sensor system	Probable cause
This code is output in the following cases. ● G sensor output voltage is less than 0.5 V or more than 4.5 V. (An open or short circuit is present in the G sensor circuit.) ● G sensor output voltage does not change. (G sensor output voltage is abnormal.)	● Malfunction of G sensor ● Malfunction of wiring harness or connector ● Malfunction of hydraulic unit and ABS-ECU

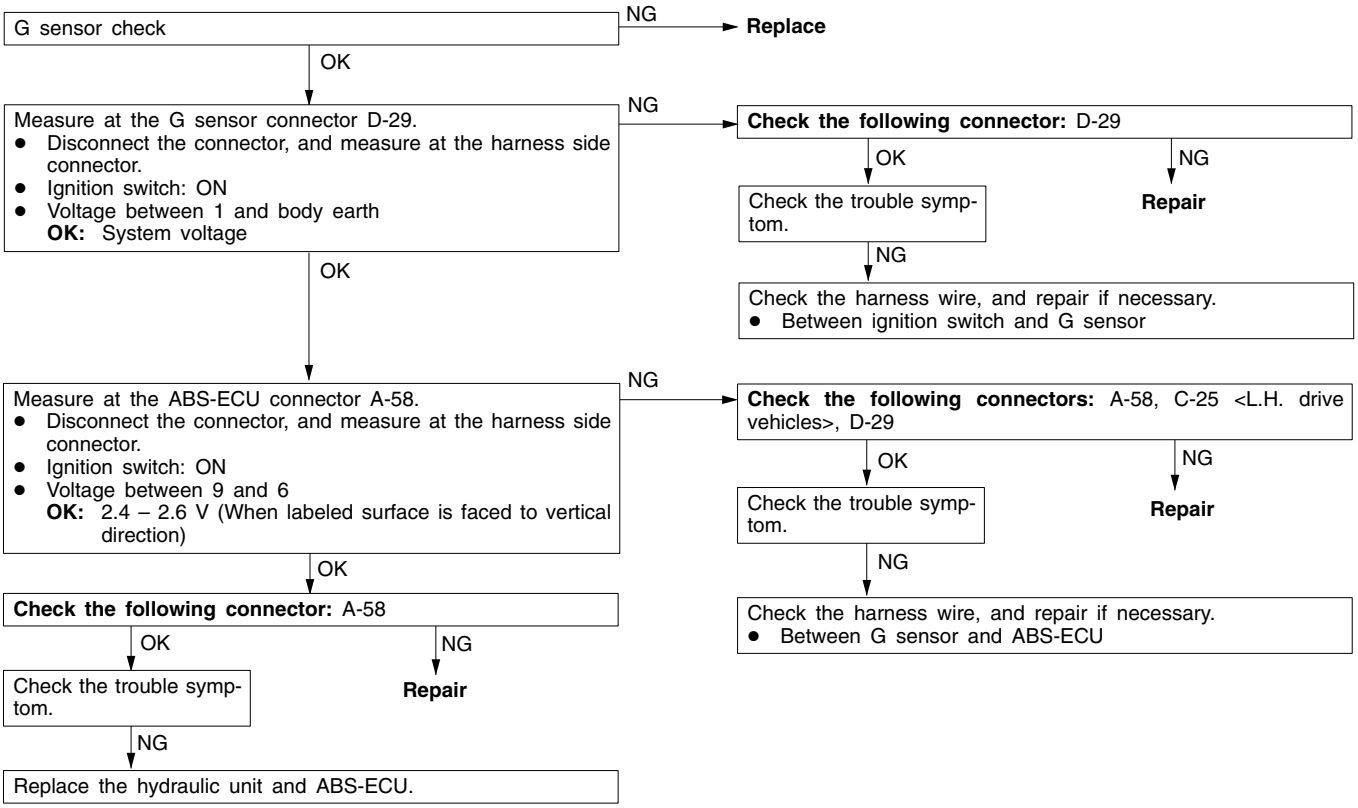

Code Nos.41, 42, 43 and 44 Solenoid valve	Probable cause
Code No.52 Valve relay problem (stays off)	
Code No.53 Motor relay problem (stays off)	
Code No.55 Motor system (seized pump motor)	
These codes are output if there is an open circuit or short-circuit in the ABS-ECU power supply circuit (power supply circuit for solenoid valve and motor), or the internal circuit in the hydraulic unit and ABS-ECU is defective.	● Malfunction of wiring harness or connector ● Malfunction of hydraulic unit and ABS-ECU

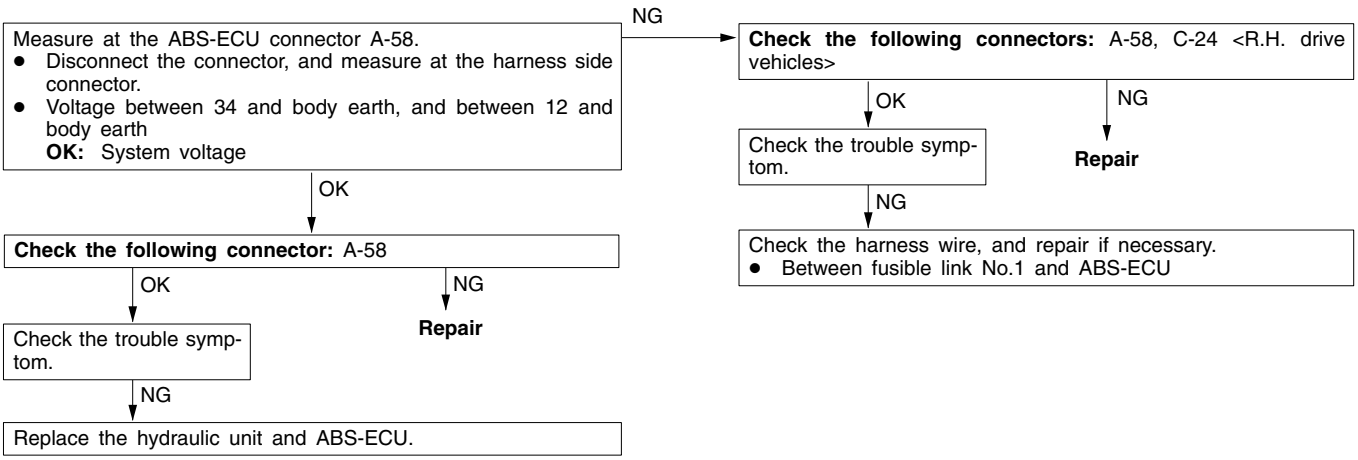

INSPECTION CHART FOR TROUBLE SYMPTOMS

Trouble symptoms	Inspection procedure No.	Reference page
Communication between the MUT-II and the whole system is not possible.	1	–
Communication between the MUT-II and the ABS-ECU is not possible.	2	35B-10
When the ignition key is turned to “ON” (engine stopped), the ABS warning lamp does not illuminate.	3	–
Even after the engine is started, the ABS warning lamp remains illuminated.	4	35B-11
Faulty ABS operation	5	35B-12

Caution

1. **If steering movements are made when driving at high speed, or when driving on road surfaces with low frictional resistance, or when passing over bumps, the ABS may operate even though sudden braking is not being applied. Because of this, when getting information from the customer, check if the problem occurred while driving under such conditions as these.**
2. **During ABS operation, the brake pedal may vibrate or may not be able to be depressed. Such phenomena are due to intermittent changes in hydraulic pressure inside the brake line to prevent the wheels from locking and is not an abnormality.**

INSPECTION PROCEDURE FOR TROUBLE SYMPTOMS

Inspection Procedure 2

Communication between MUT-II and the ABS-ECU is not possible.	Probable cause
The cause may be an open circuit in the ABS-ECU power supply circuit or an open circuit in the diagnosis output circuit.	• Blown fuse • Malfunction of wiring harness or connector • Malfunction of hydraulic unit and ABS-ECU

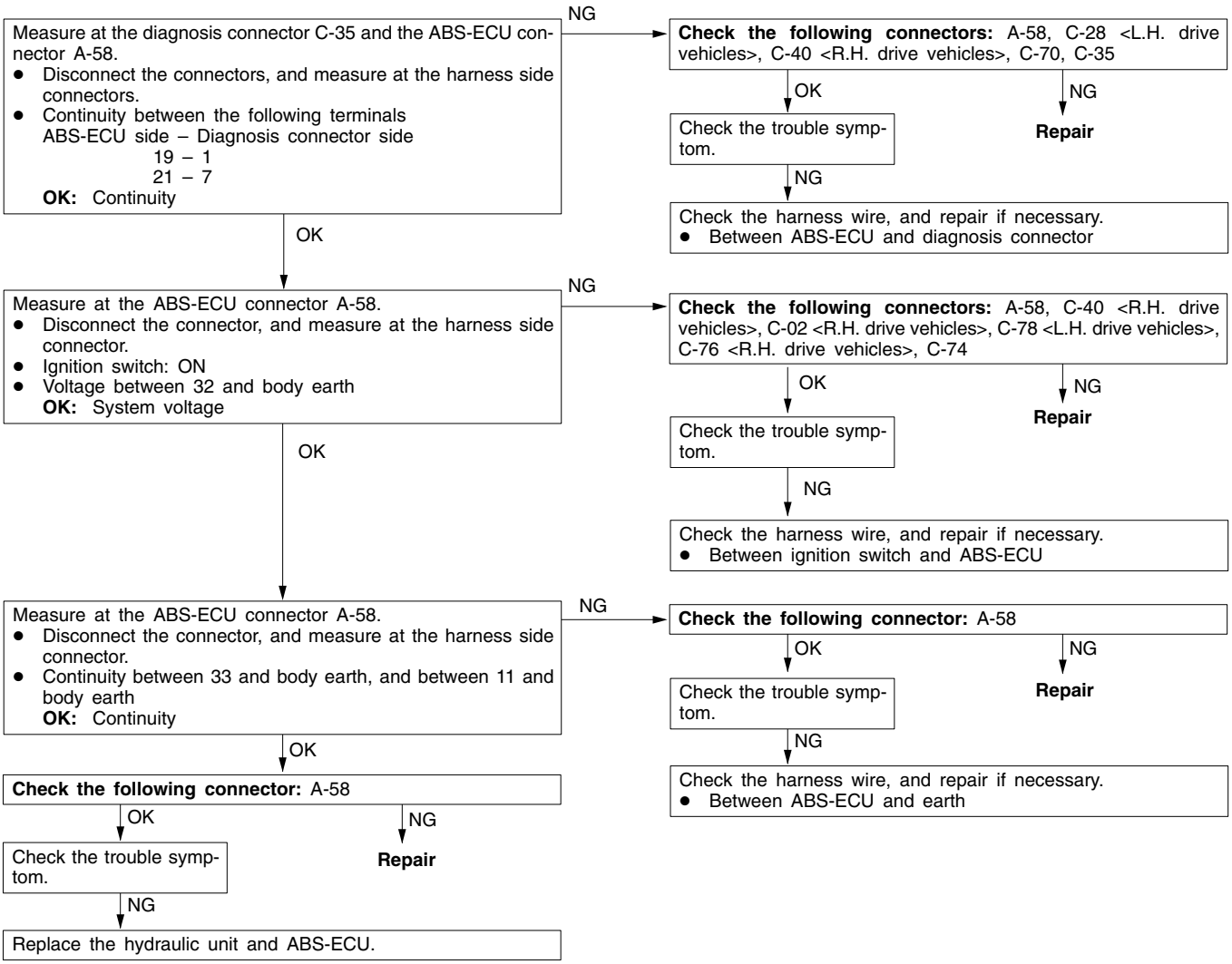

Inspection Procedure 4

Even after the engine is started, the ABS warning lamp remains illuminated.	Probable cause
The cause is probably a short-circuit in the ABS warning lamp illumination circuit.	• Malfunction of combination meter • Malfunction of ABS warning lamp relay • Malfunction of wiring harness (short circuit) • Malfunction of hydraulic unit and ABS-ECU

NOTE
This trouble symptom is limited to cases where communication with the MUT-II is possible (ABS-ECU power supply is normal) and the diagnosis code is a normal diagnosis code.

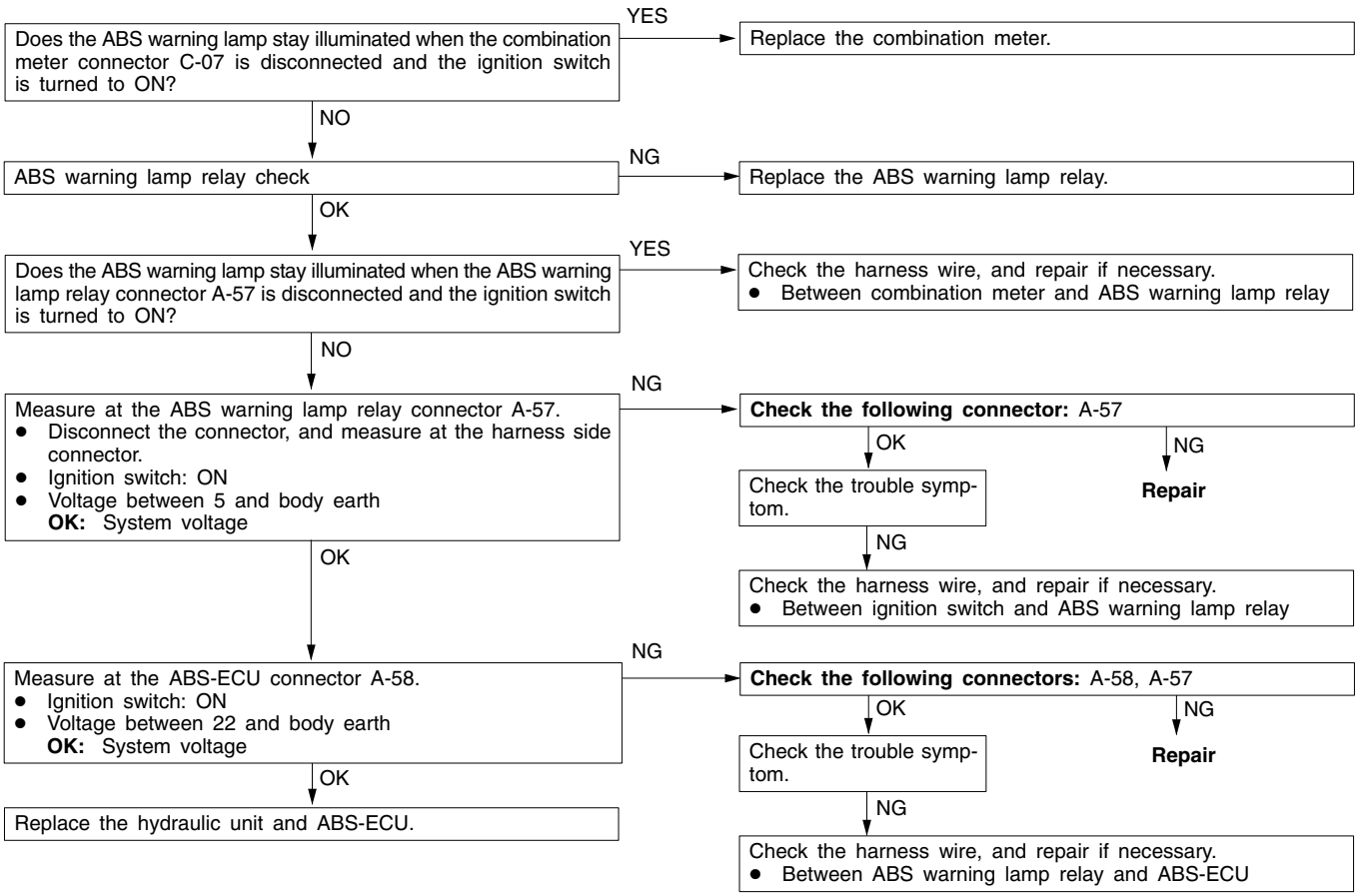

Inspection Procedure 5

Faulty ABS operation	Probable cause
This varies depending on the driving conditions and the road surface conditions, so problem diagnosis is difficult. However, if a normal diagnosis code is displayed, carry out the following inspection.	• Improper installation of wheel speed sensor • Malfunction of wiring harness or connector • Malfunction of wheel speed sensor • Malfunction of ABS rotor • Foreign material adhering to wheel speed sensor • Malfunction of wheel bearing • Malfunction of hydraulic unit and ABS-ECU

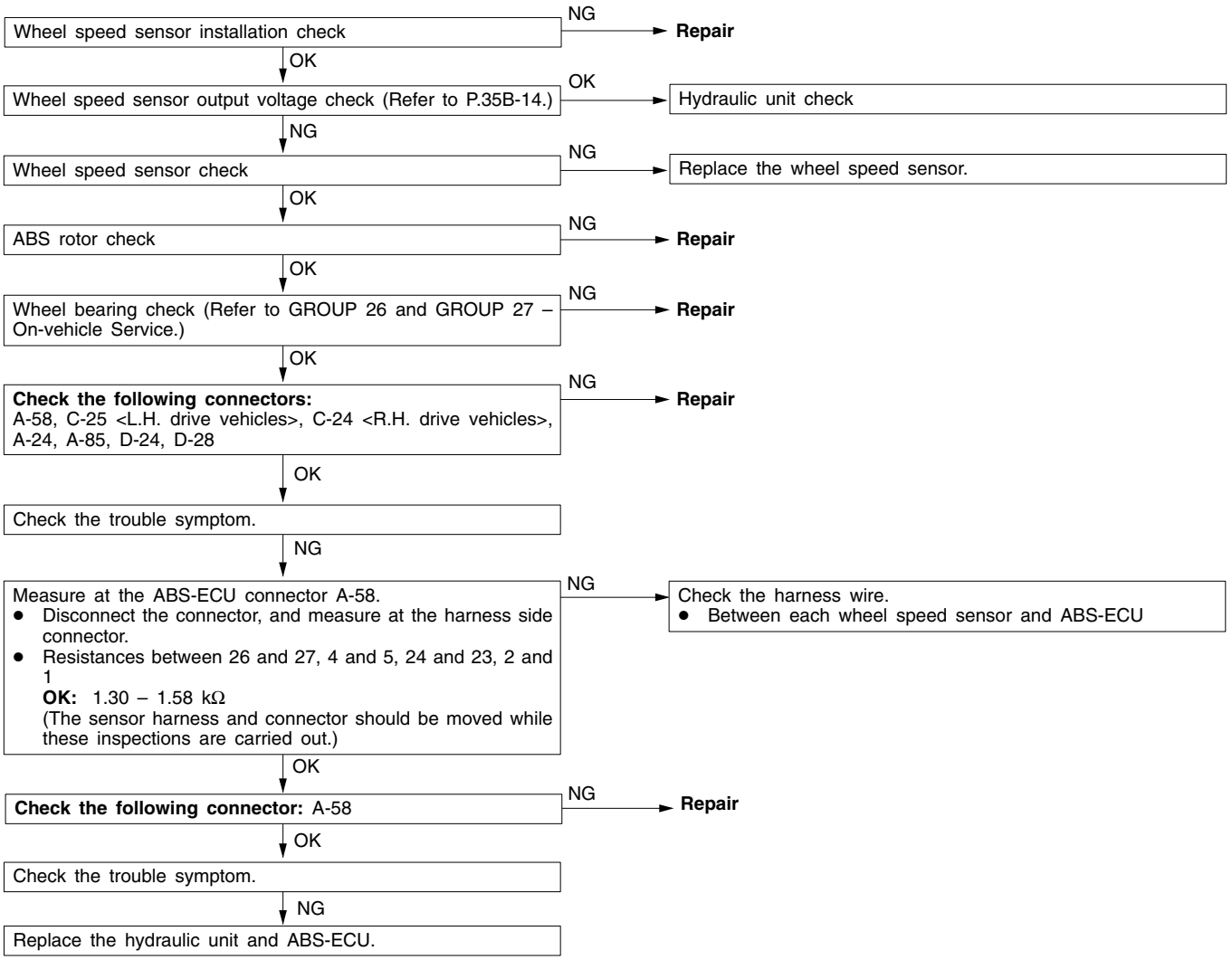

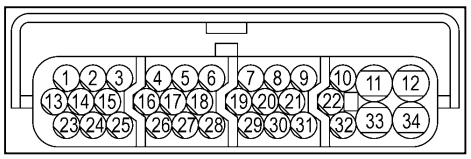

Y0133AL

CHECK AT ABS-ECU

TERMINAL VOLTAGE CHECK CHART

1. Measure the voltages between the respective terminal and earth.
2. The terminal layout is shown in the illustration.

Terminal No.	Check item	Checking requirements		Normal condition
3	Stop lamp switch input	Ignition switch: ON	Stop lamp switch: ON	System voltage
			Stop lamp switch: OFF	1 V or less
6	G sensor earth	Always		0 V
9	Input from G sensor	Ignition switch: ON Vehicle is horizontal		2.4 – 2.6 V
12	Solenoid valve power supply	Always		System voltage
19	Diagnosis changeover input	When the MUT-II is connected		0 V
		When the MUT-II is not connected		Approx. 12 V
21	MUT-II	When the MUT-II is connected		Serial communication with MUT-II
		When the MUT-II is not connected		1 V or less
22	ABS warning lamp relay transistor output	Ignition switch: ON	When the lamp is switched off	2 V or less
			When the lamp is illuminated	System voltage
32	ABS-ECU power supply	Ignition switch: ON		System voltage
		Ignition switch: START		0 V
34	Motor power supply	Always		System voltage

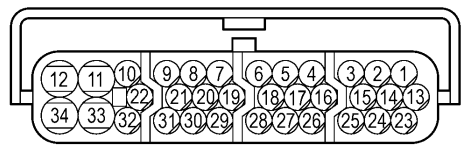

Y0132AL

RESISTANCE AND CONTINUITY BETWEEN HARNESS-SIDE CONNECTOR TERMINALS

1. Turn the ignition key to the LOCK (OFF) position.
2. Disconnect the ABS-ECU connector.
3. Check the resistance and continuity between the terminals indicated in the table below.
4. The terminal layout is shown in the illustration.

ABS-ECU terminal No.	Signal	Normal condition
1 – 2	Wheel speed sensor (rear left)	1.30 – 1.58 kΩ
23 – 24	Wheel speed sensor (rear right)	
4 – 5	Wheel speed sensor (front left)	
26 – 27	Wheel speed sensor (front right)	
11 – Body earth	Earth	Continuity
33 – Body earth	Earth	

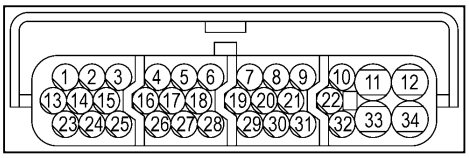

Y0133AL

ON-VEHICLE SERVICE

WHEEL SPEED SENSOR OUTPUT VOLTAGE CHECK

1. Lift up the vehicle and release the parking brake.
2. Disconnect the ABS-ECU connector.
3. Rotate the wheel to be measured at approximately 1/2–1 rotation per second, and check the output voltage using a circuit tester or an oscilloscope.

Wheel speed sensor	Front left	Front right	Rear left	Rear right
Terminal No.	4	26	2	24
	5	27	1	23

Output voltage

When measuring with a circuit tester:
42 mV or more

When measuring with an oscilloscope:
120 mV p-p or more

4. The followings are suspected if the output voltage is lower than the value described above. Check the wheel speed sensor, and replace if necessary.
   - Too large clearance between the pole piece of the wheel speed sensor and ABS rotor
   - Faulty wheel speed sensor

HYDRAULIC UNIT AND ABS-ECU

REMOVAL AND INSTALLATION

Pre-removal Operation
- Brake Fluid Draining
- Air Cleaner Removal (Refer to GROUP 15.)

Post-installation Operation
- Brake Fluid Supplying and Brake Line Bleeding (Refer to GROUP 35A – On-vehicle Service.)
- Hydraulic Unit Inspection
- Air Cleaner Installation (Refer to GROUP 15.)

<L.H. drive vehicles>

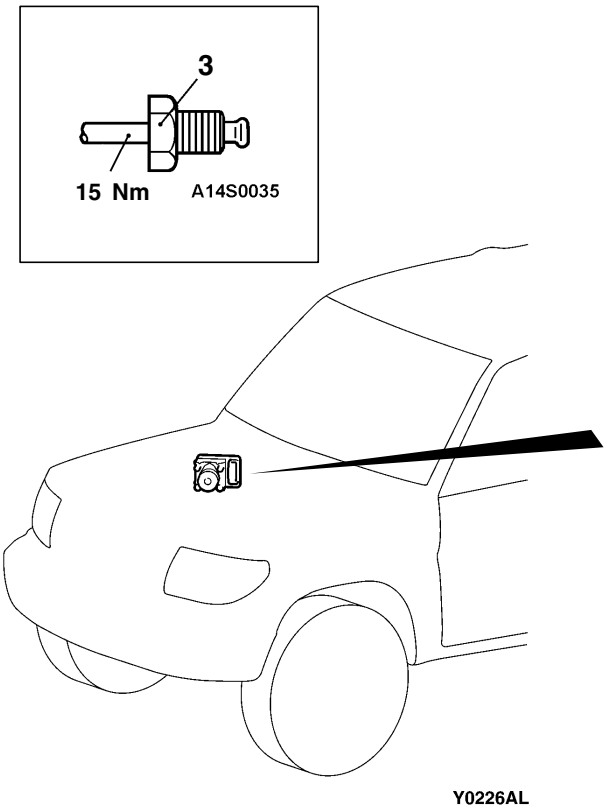

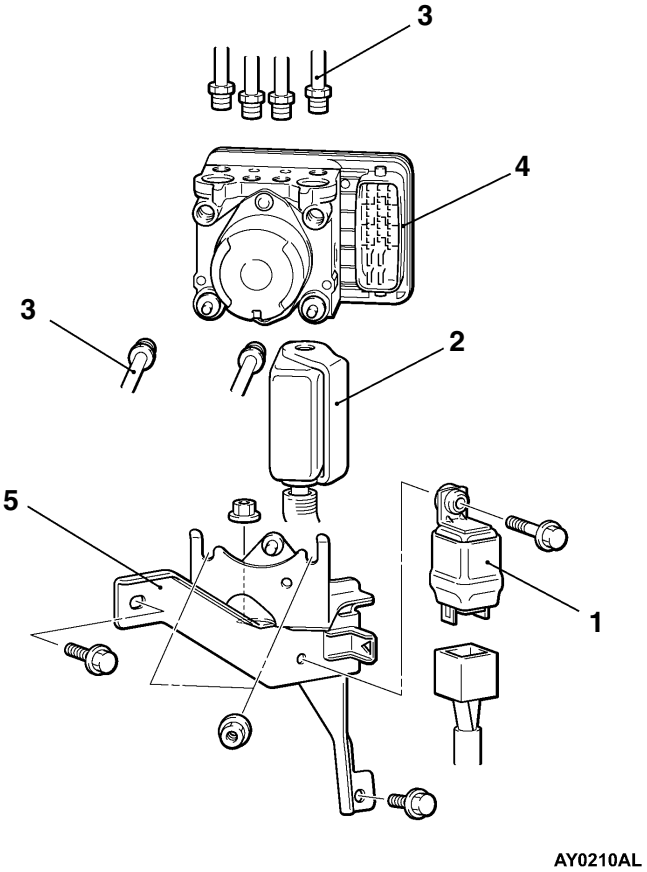

<R.H. drive vehicles>

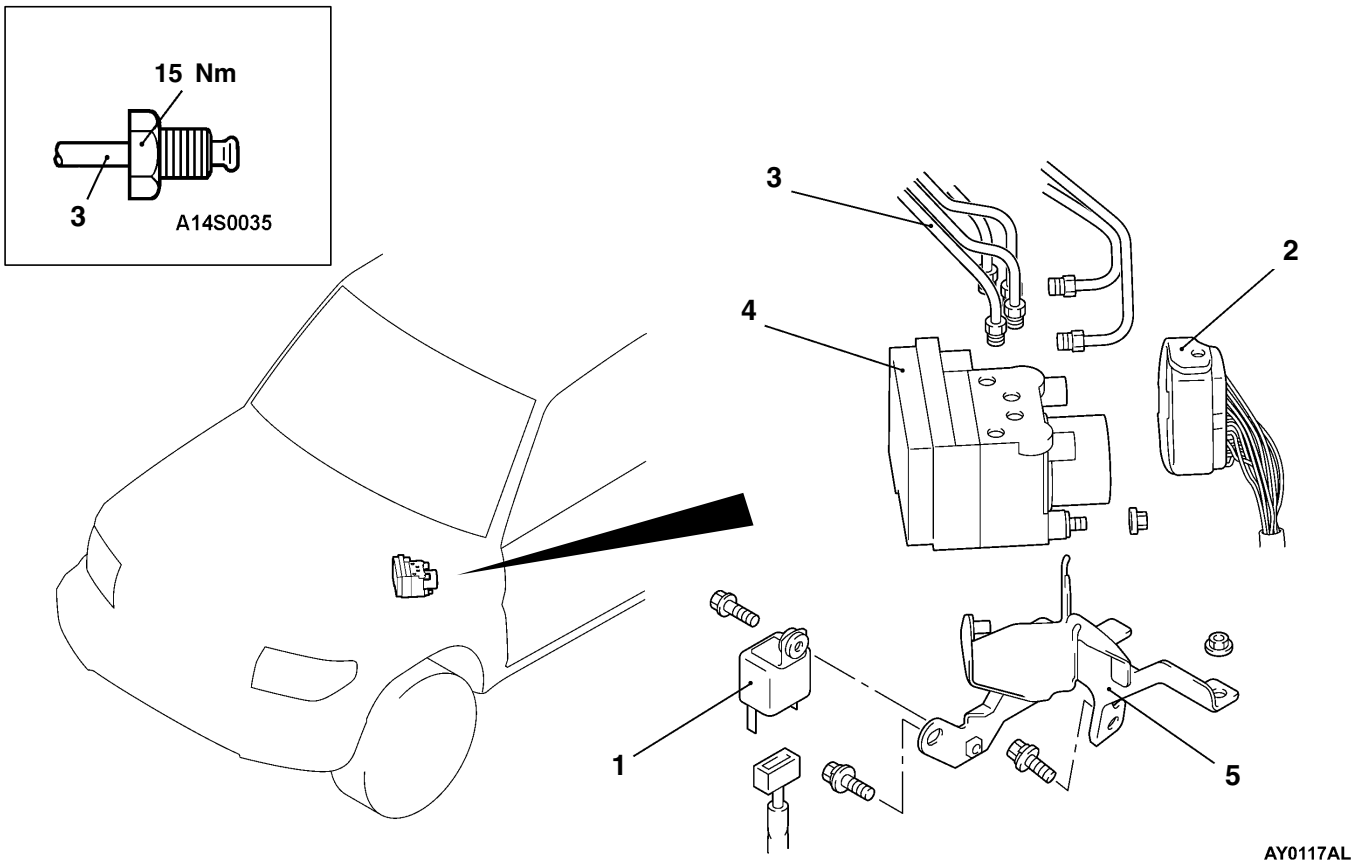

Removal steps

1. ABS warning lamp relay
2. Harness connector
3. ◀A▶ ▶A◀ Brake pipe connection
4. ◀B▶ Hydraulic unit and ABS-ECU
5. Hydraulic unit bracket assembly

NOTE
The removal service points are the same as before.

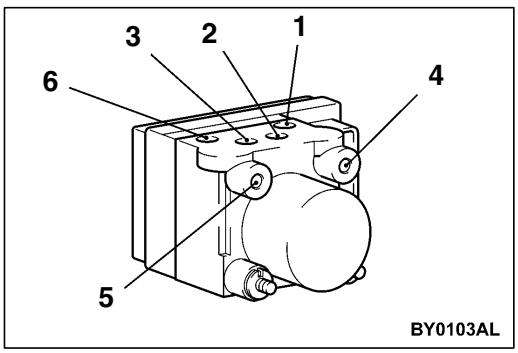

INSTALLATION SERVICE POINT

▶A◀ BRAKE PIPE CONNECTION

Connect the pipes to the hydraulic unit assembly as shown in the illustration.

1. To the front brake (L.H.)
2. To the proportioning valve (Rear brake, R.H.)
3. To the proportioning valve (Rear brake, L.H.)
4. From the master cylinder (Primary)
5. From the master cylinder (Secondary)
6. To the front brake (R.H.)