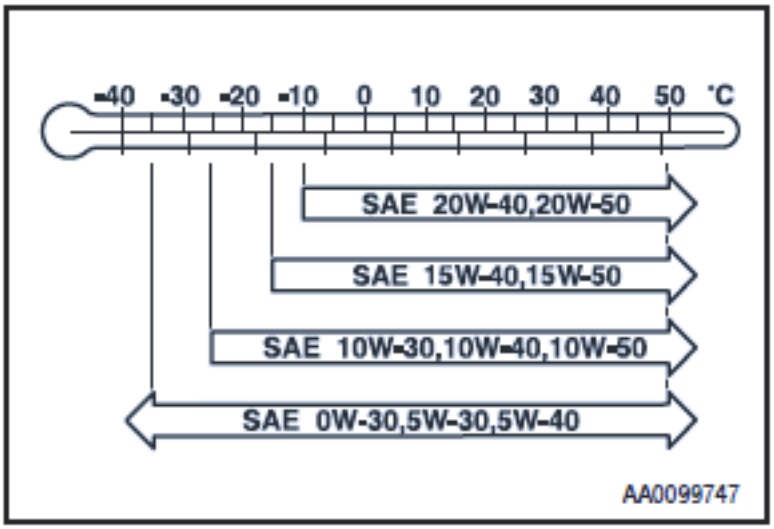
-40 -30 -20 -10 0 10 20 30 40 50 °C
SAE 20W-40,20W-50
SAE 15W-40,15W-50
SAE 10W-30,10W-40,10W-50
SAE 0W-30,5W-30,5W-40
AA0099747