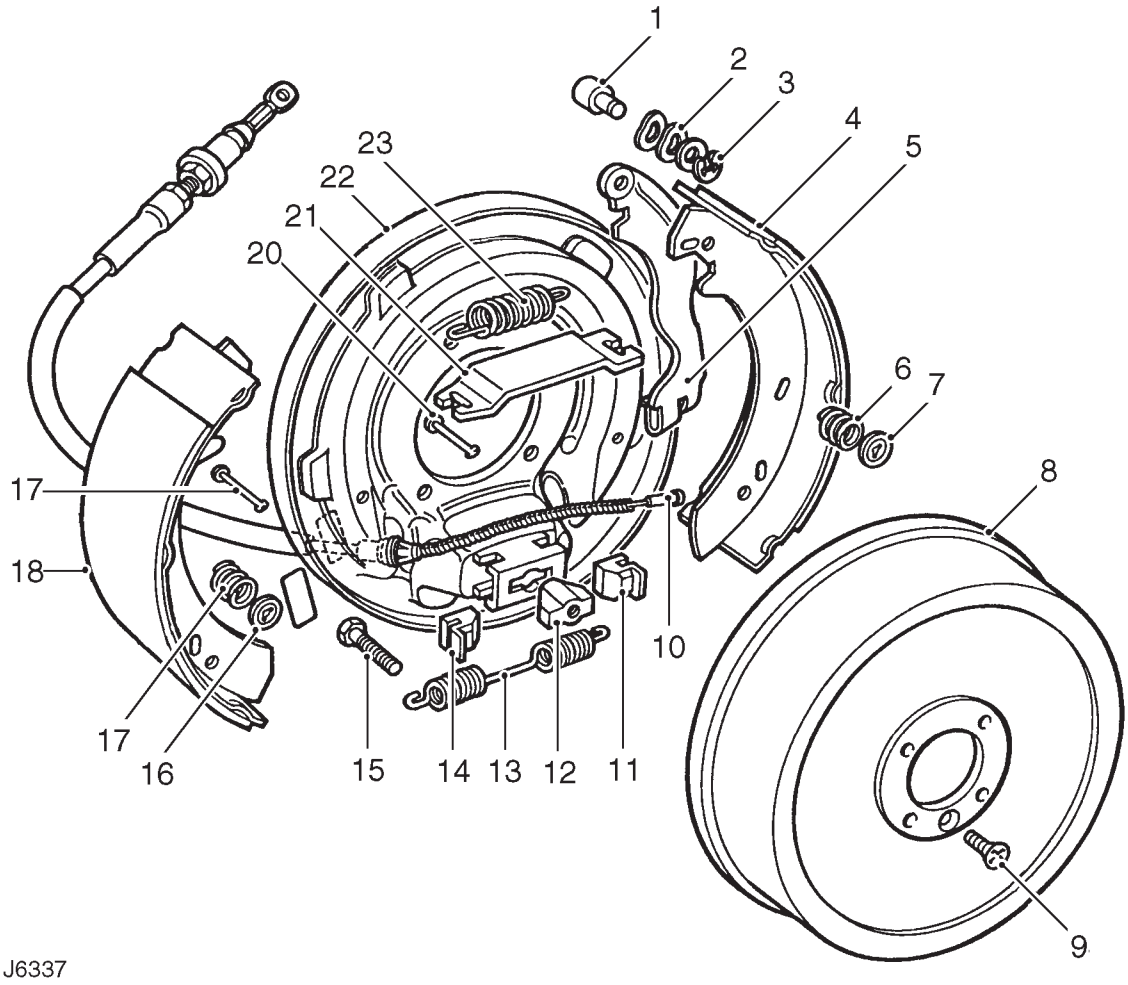

TRANSMISSION BRAKE

1. Pin
2. Washer
3. 'C' clip
4. Brake shoe
5. Cable lever
6. Hold down spring
7. Dished washer
8. Brake drum
9. Screw
10. Brake cable
11. Adjuster slide
12. Aadjuster nut
13. Spring
14. Adjuster slide
15. Adjuster bolt
16. Dished washer
17. Hold down spring
18. Brake shoe
19. Hold down pin
20. Hold down pin
21. Abutment plate
22. Back plate
23. Spring