GAS

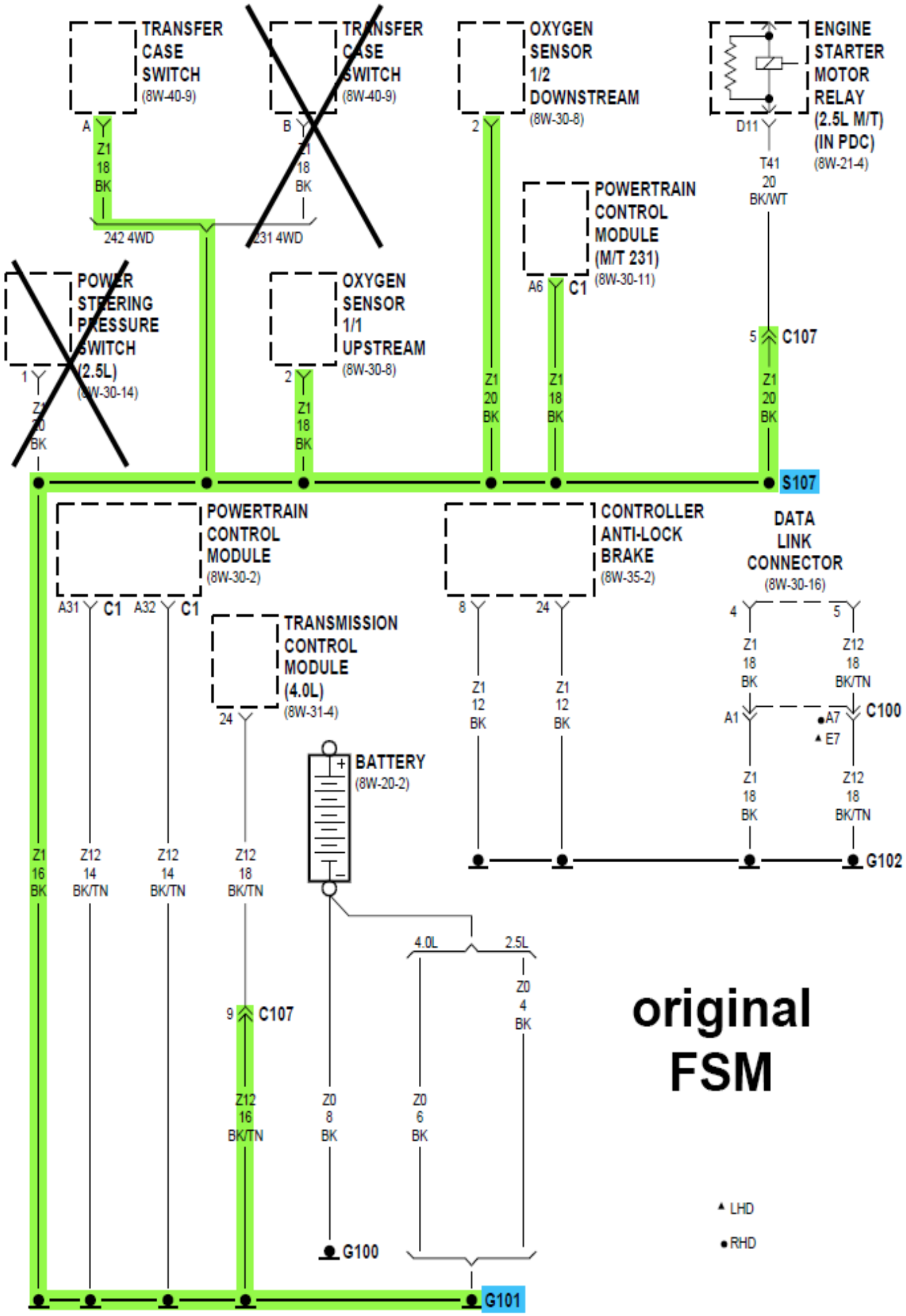
TRANSFER CASE SWITCH (8W-40-9)
A
Z1 18 BK
242 4WD
TRANSFER CASE SWITCH (8W-40-9)
B
Z1 18 BK
231 4WD
OXYGEN SENSOR 1/2 DOWNSTREAM (8W-30-8)
2
Z1 20 BK
ENGINE STARTER MOTOR RELAY (2.5L M/T) (IN PDC) (8W-21-4)
D11
T41 20 BK/WT
POWERTRAIN CONTROL MODULE (M/T 231) (8W-30-11)
A6
C1
Z1 18 BK
POWER STEERING PRESSURE SWITCH (2.5L) (8W-30-14)
1
Z1 20 BK
OXYGEN SENSOR 1/1 UPSTREAM (8W-30-8)
2
Z1 18 BK
5
C107
Z1 20 BK
S107
POWERTRAIN CONTROL MODULE (8W-30-2)
A31
C1
A32
C1
TRANSMISSION CONTROL MODULE (4.0L) (8W-31-4)
24
CONTROLLER ANTI-LOCK BRAKE (8W-35-2)
8
24
Z1 12 BK
Z1 12 BK
DATA LINK CONNECTOR (8W-30-16)
4
5
Z1 18 BK
Z12 18 BK/TN
A1
A7
E7
C100
Z1 18 BK
Z12 18 BK/TN
G102
BATTERY (8W-20-2)
Z1 16 BK
Z12 14 BK/TN
Z12 14 BK/TN
Z12 18 BK/TN
4.0L
2.5L
Z0 4 BK
9
C107
Z12 16 BK/TN
Z0 8 BK
Z0 6 BK
G100
G101
original FSM
LHD
RHD