GAS

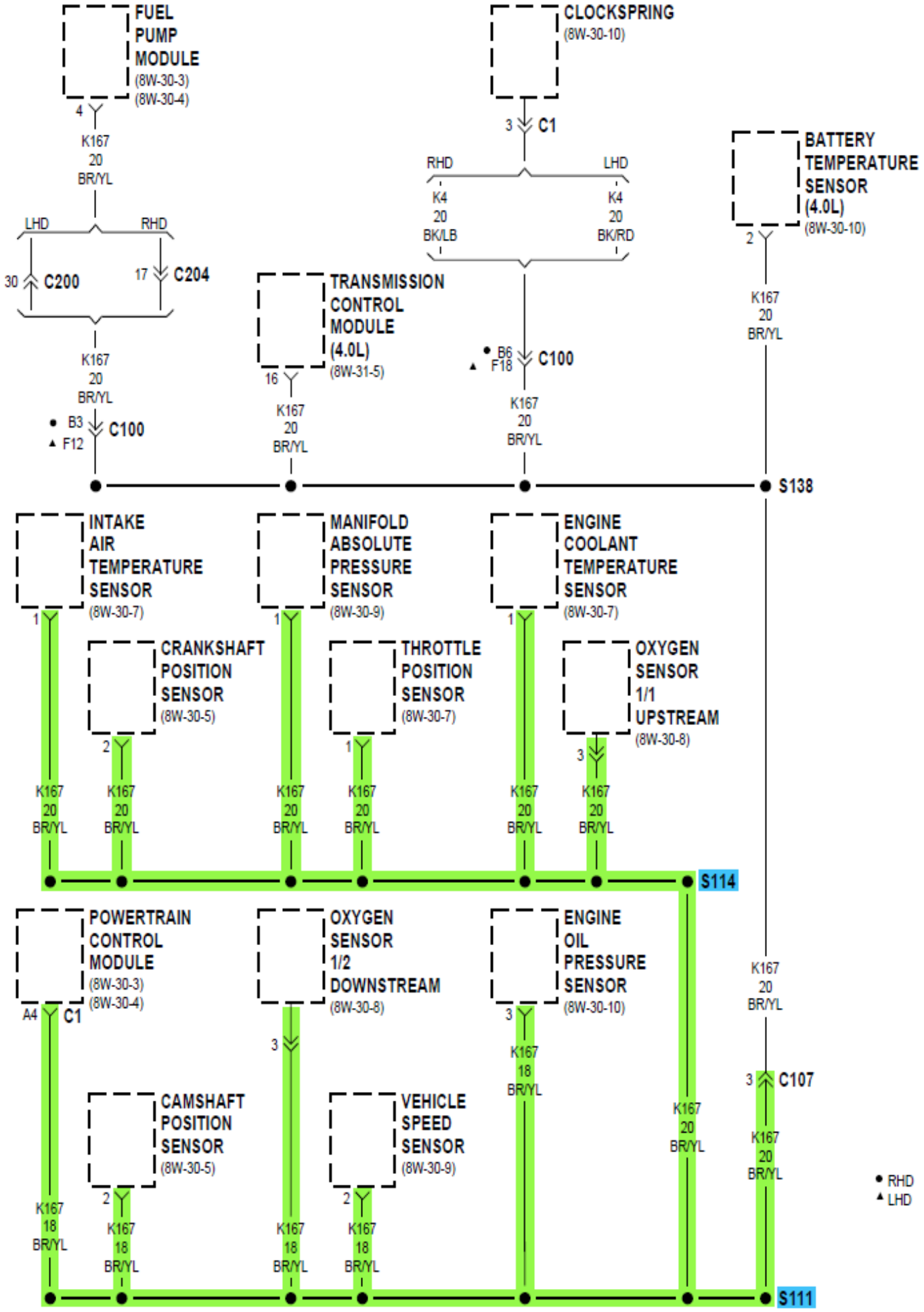
FUEL PUMP MODULE
(8W-30-3)
(8W-30-4)
4
K167
20
BR/YL
LHD
RHD
30
C200
17
C204
K167
20
BR/YL
B3
F12
C100
CLOCKSPRING
(8W-30-10)
3
C1
RHD
LHD
K4
20
BK/LB
K4
20
BK/RD
B6
F18
C100
K167
20
BR/YL
TRANSMISSION CONTROL MODULE (4.0L)
(8W-31-5)
16
K167
20
BR/YL
BATTERY TEMPERATURE SENSOR (4.0L)
(8W-30-10)
2
K167
20
BR/YL
S138
INTAKE AIR TEMPERATURE SENSOR
(8W-30-7)
1
K167
20
BR/YL
CRANKSHAFT POSITION SENSOR
(8W-30-5)
2
K167
20
BR/YL
MANIFOLD ABSOLUTE PRESSURE SENSOR
(8W-30-9)
1
K167
20
BR/YL
THROTTLE POSITION SENSOR
(8W-30-7)
1
K167
20
BR/YL
ENGINE COOLANT TEMPERATURE SENSOR
(8W-30-7)
1
K167
20
BR/YL
OXYGEN SENSOR 1/1 UPSTREAM
(8W-30-8)
3
K167
20
BR/YL
S114
POWERTRAIN CONTROL MODULE
(8W-30-3)
(8W-30-4)
A4
C1
K167
18
BR/YL
CAMSHAFT POSITION SENSOR
(8W-30-5)
2
K167
18
BR/YL
OXYGEN SENSOR 1/2 DOWNSTREAM
(8W-30-8)
3
K167
18
BR/YL
VEHICLE SPEED SENSOR
(8W-30-9)
2
K167
18
BR/YL
ENGINE OIL PRESSURE SENSOR
(8W-30-10)
3
K167
18
BR/YL
K167
20
BR/YL
K167
20
BR/YL
3
C107
K167
20
BR/YL
S111
RHD
LHD