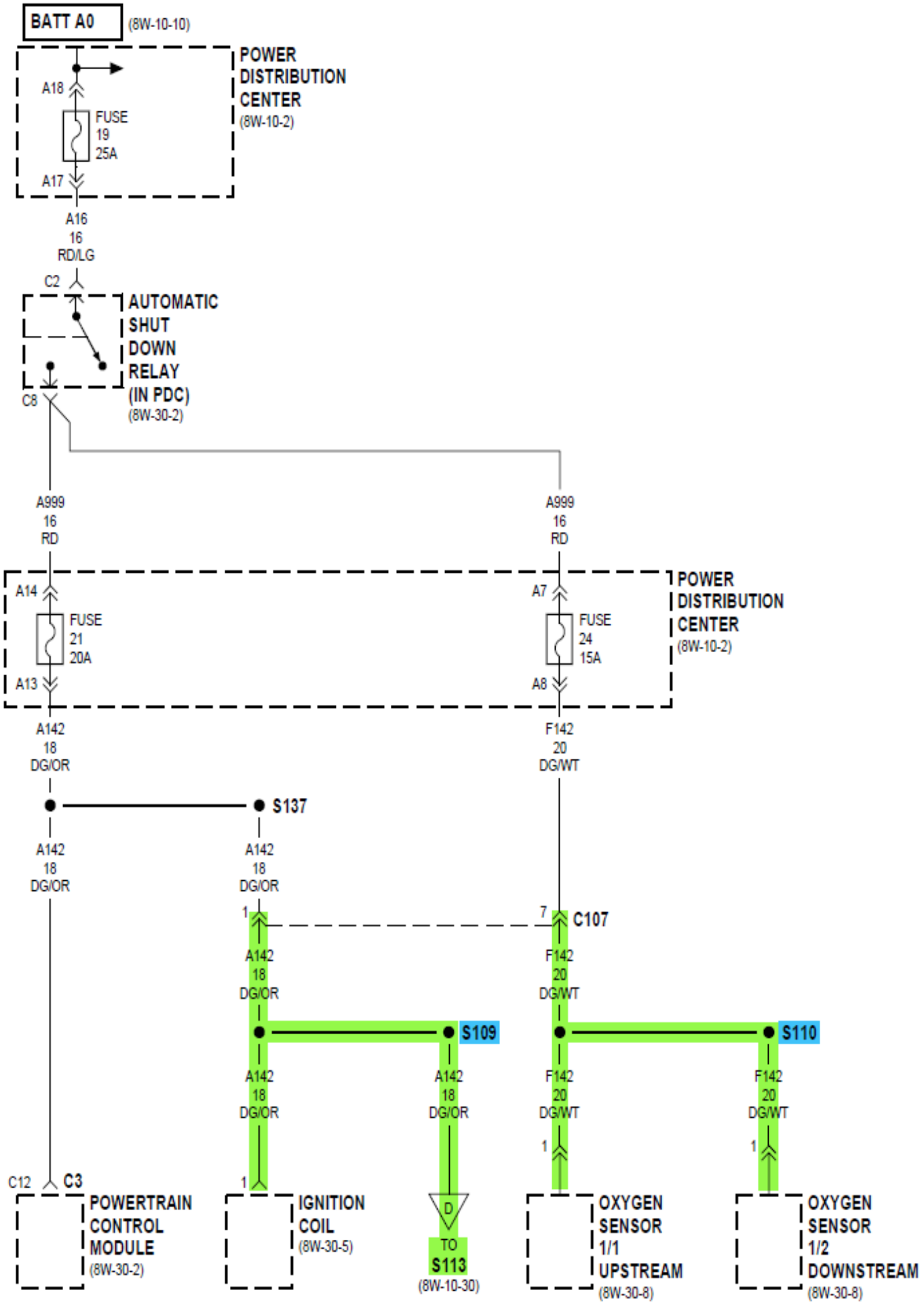
BATT A0
(8W-10-10)
POWER DISTRIBUTION CENTER
(8W-10-2)
A18
FUSE 19 25A
A17
A16 16 RD/LG
C2
AUTOMATIC SHUT DOWN RELAY (IN PDC)
(8W-30-2)
C8
A999 16 RD
A999 16 RD
A14
FUSE 21 20A
A13
A7
FUSE 24 15A
A8
POWER DISTRIBUTION CENTER
(8W-10-2)
A142 18 DG/OR
F142 20 DG/WT
S137
A142 18 DG/OR
A142 18 DG/OR
1
7
C107
A142 18 DG/OR
F142 20 DG/WT
S109
S110
A142 18 DG/OR
A142 18 DG/OR
F142 20 DG/WT
F142 20 DG/WT
1
1
1
C12
C3
POWERTRAIN CONTROL MODULE
(8W-30-2)
IGNITION COIL
(8W-30-5)
D
TO S113
(8W-10-30)
OXYGEN SENSOR 1/1 UPSTREAM
(8W-30-8)
OXYGEN SENSOR 1/2 DOWNSTREAM
(8W-30-8)