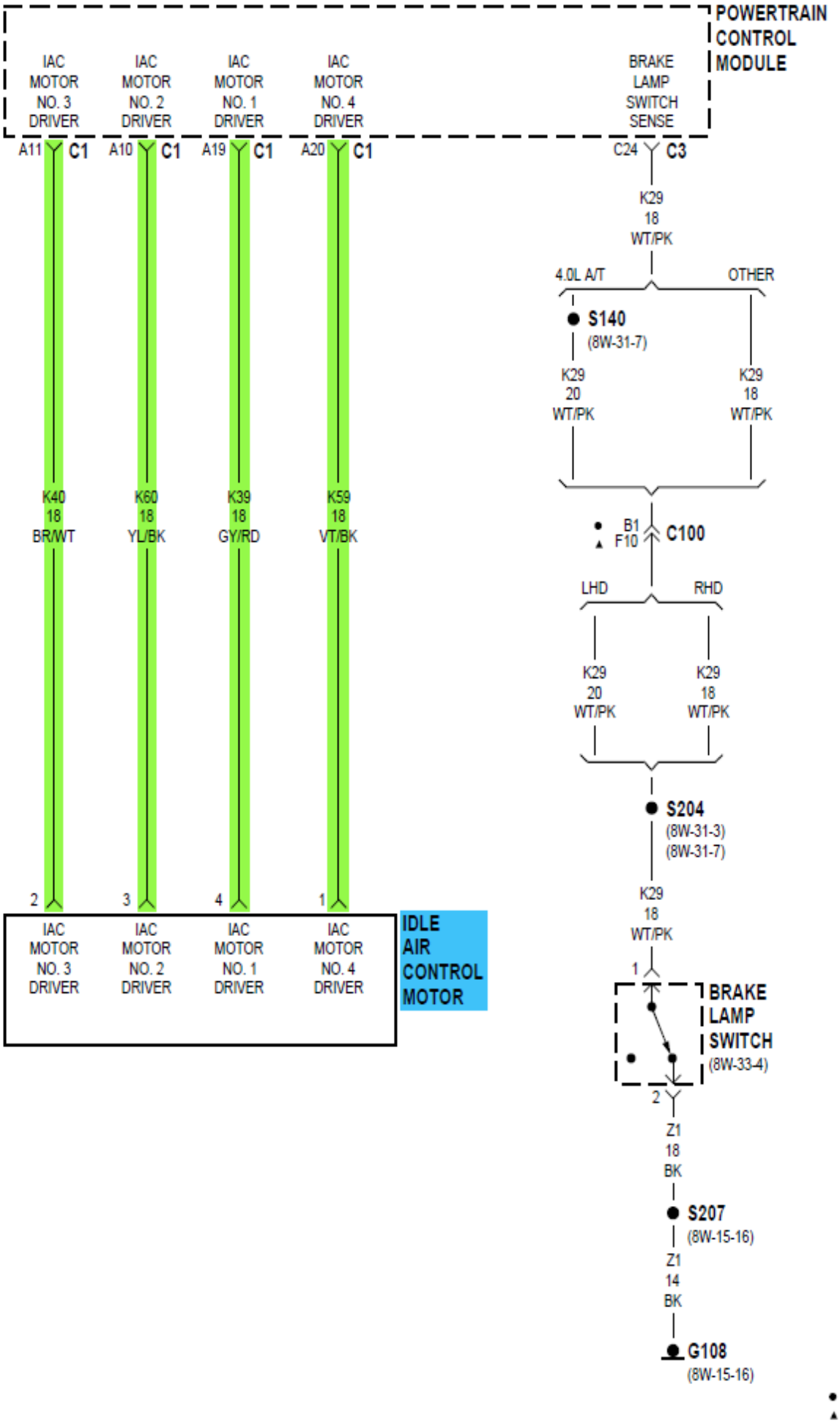
POWERTRAIN CONTROL MODULE
IAC MOTOR NO. 3 DRIVER
IAC MOTOR NO. 2 DRIVER
IAC MOTOR NO. 1 DRIVER
IAC MOTOR NO. 4 DRIVER
BRAKE LAMP SWITCH SENSE
A11 C1
A10 C1
A19 C1
A20 C1
C24 C3
K29 18 WT/PK
4.0L A/T
OTHER
S140
(8W-31-7)
K29 20 WT/PK
K29 18 WT/PK
K40 18 BR/WT
K60 18 YL/BK
K39 18 GY/RD
K59 18 VT/BK
B1
F10
C100
LHD
RHD
K29 20 WT/PK
K29 18 WT/PK
S204
(8W-31-3)
(8W-31-7)
K29 18 WT/PK
2
3
4
1
IAC MOTOR NO. 3 DRIVER
IAC MOTOR NO. 2 DRIVER
IAC MOTOR NO. 1 DRIVER
IAC MOTOR NO. 4 DRIVER
IDLE AIR CONTROL MOTOR
1
BRAKE LAMP SWITCH
(8W-33-4)
2
Z1 18 BK
S207
(8W-15-16)
Z1 14 BK
G108
(8W-15-16)
RHD
LHD