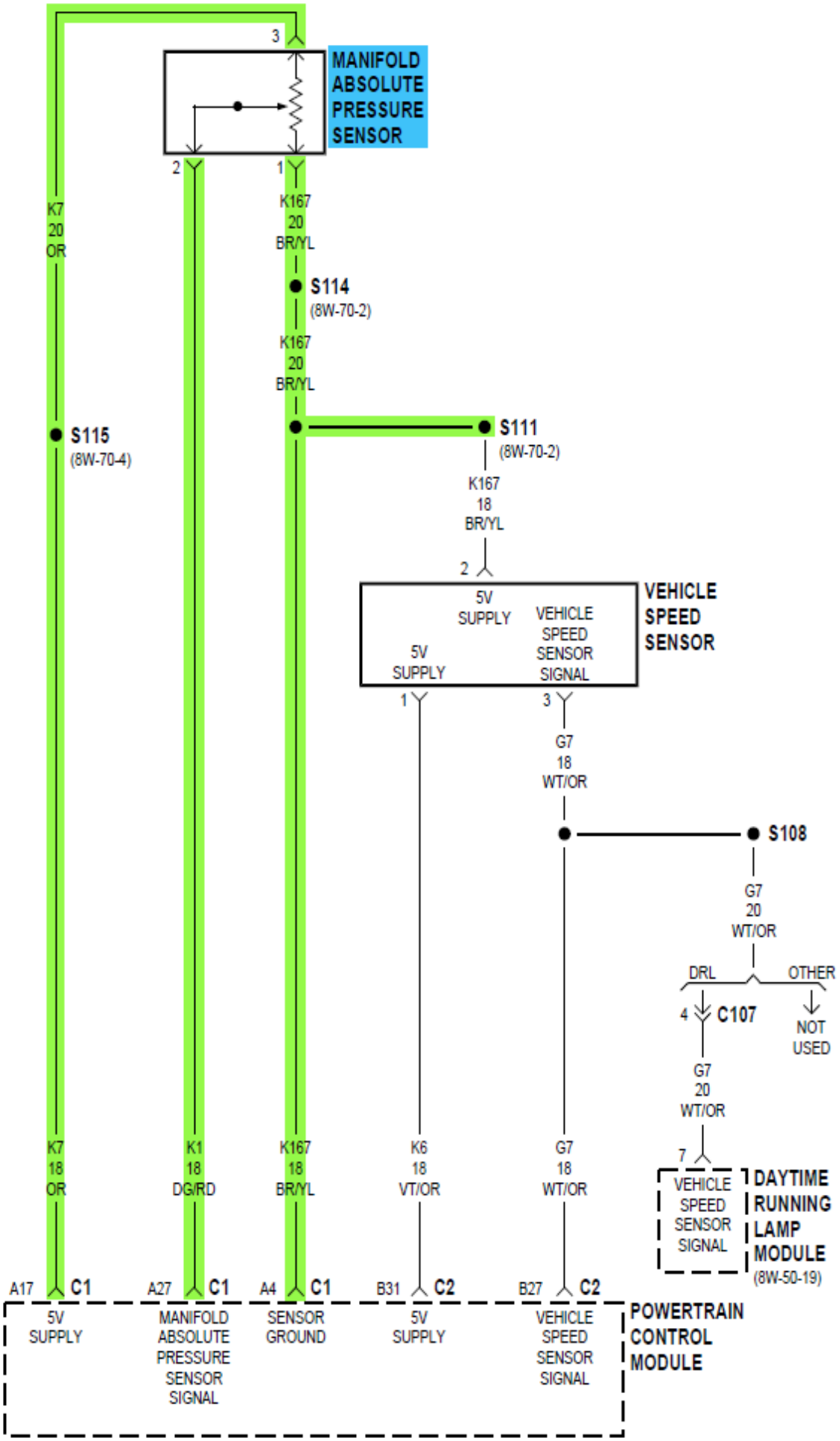
MANIFOLD ABSOLUTE PRESSURE SENSOR
3
2
1
K7 20 OR
K167 20 BR/YL
S114
(8W-70-2)
K167 20 BR/YL
S115
(8W-70-4)
S111
(8W-70-2)
K167 18 BR/YL
2
5V SUPPLY
VEHICLE SPEED SENSOR SIGNAL
5V SUPPLY
VEHICLE SPEED SENSOR
1
3
G7 18 WT/OR
S108
G7 20 WT/OR
DRL
OTHER
4
C107
NOT USED
G7 20 WT/OR
7
VEHICLE SPEED SENSOR SIGNAL
DAYTIME RUNNING LAMP MODULE
(8W-50-19)
K7 18 OR
K1 18 DG/RD
K167 18 BR/YL
K6 18 VT/OR
G7 18 WT/OR
A17
C1
A27
C1
A4
C1
B31
C2
B27
C2
5V SUPPLY
MANIFOLD ABSOLUTE PRESSURE SENSOR SIGNAL
SENSOR GROUND
5V SUPPLY
VEHICLE SPEED SENSOR SIGNAL
POWERTRAIN CONTROL MODULE