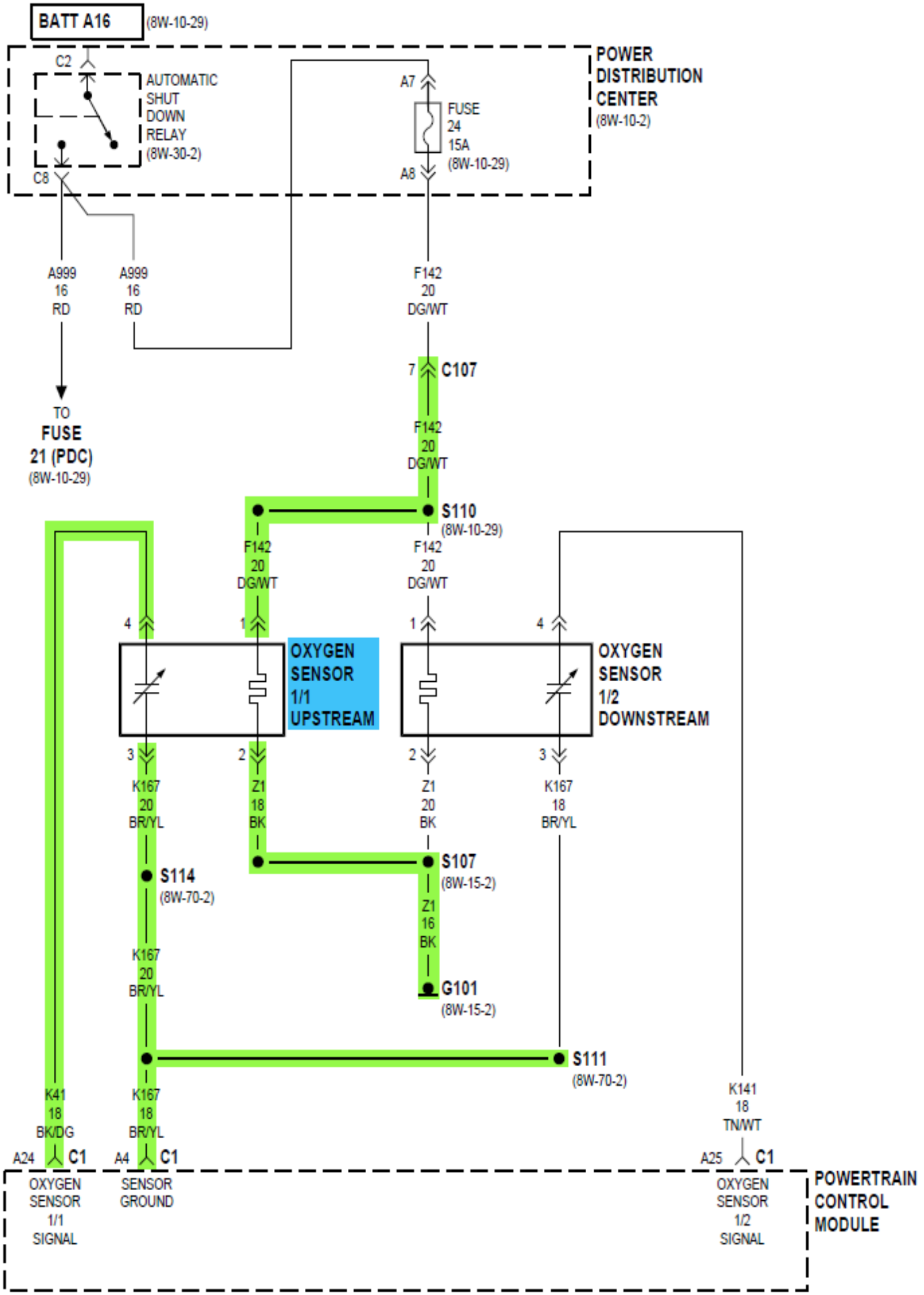
BATT A16
(8W-10-29)
POWER DISTRIBUTION CENTER
(8W-10-2)
C2
C8
AUTOMATIC SHUT DOWN RELAY
(8W-30-2)
A7
A8
FUSE 24 15A
(8W-10-29)
A999 16 RD
A999 16 RD
TO FUSE 21 (PDC)
(8W-10-29)
F142 20 DG/WT
7
C107
F142 20 DG/WT
S110
(8W-10-29)
F142 20 DG/WT
F142 20 DG/WT
4
1
1
4
OXYGEN SENSOR 1/1 UPSTREAM
OXYGEN SENSOR 1/2 DOWNSTREAM
3
2
2
3
K167 20 BR/YL
Z1 18 BK
Z1 20 BK
K167 18 BR/YL
S114
(8W-70-2)
S107
(8W-15-2)
Z1 16 BK
G101
(8W-15-2)
K167 20 BR/YL
S111
(8W-70-2)
K41 18 BK/DG
K167 18 BR/YL
K141 18 TN/WT
A24
C1
A4
C1
A25
C1
OXYGEN SENSOR 1/1 SIGNAL
SENSOR GROUND
OXYGEN SENSOR 1/2 SIGNAL
POWERTRAIN CONTROL MODULE