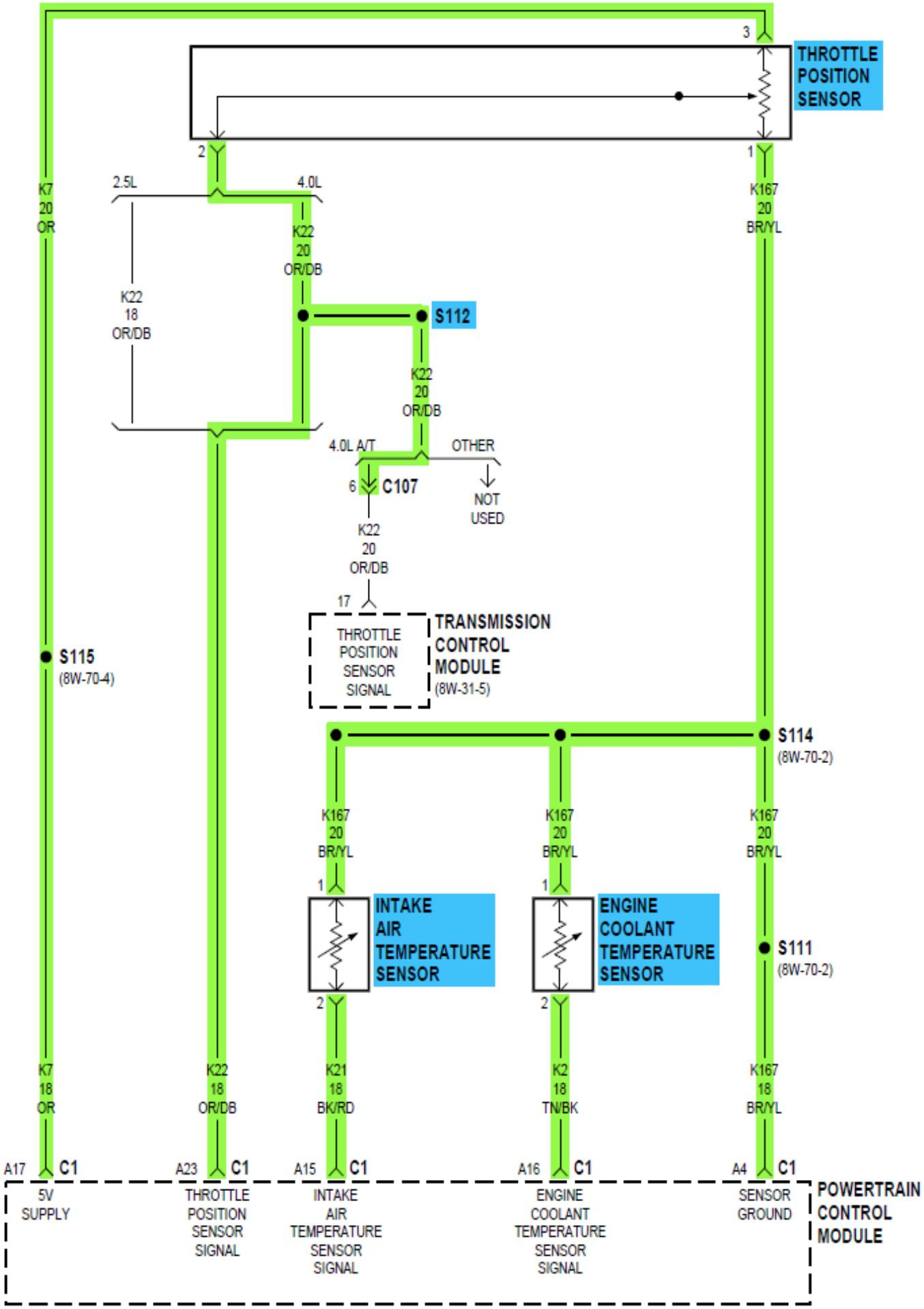
THROTTLE POSITION SENSOR
3
2
1
K7 20 OR
2.5L
4.0L
K22 20 OR/DB
K22 18 OR/DB
S112
K22 20 OR/DB
4.0L A/T
OTHER
6
C107
NOT USED
K22 20 OR/DB
17
THROTTLE POSITION SENSOR SIGNAL
TRANSMISSION CONTROL MODULE
(8W-31-5)
K167 20 BR/YL
S115
(8W-70-4)
S114
(8W-70-2)
K167 20 BR/YL
K167 20 BR/YL
K167 20 BR/YL
1
1
INTAKE AIR TEMPERATURE SENSOR
ENGINE COOLANT TEMPERATURE SENSOR
S111
(8W-70-2)
2
2
K7 18 OR
K22 18 OR/DB
K21 18 BK/RD
K2 18 TN/BK
K167 18 BR/YL
A17 C1
A23 C1
A15 C1
A16 C1
A4 C1
5V SUPPLY
THROTTLE POSITION SENSOR SIGNAL
INTAKE AIR TEMPERATURE SENSOR SIGNAL
ENGINE COOLANT TEMPERATURE SENSOR SIGNAL
SENSOR GROUND
POWERTRAIN CONTROL MODULE