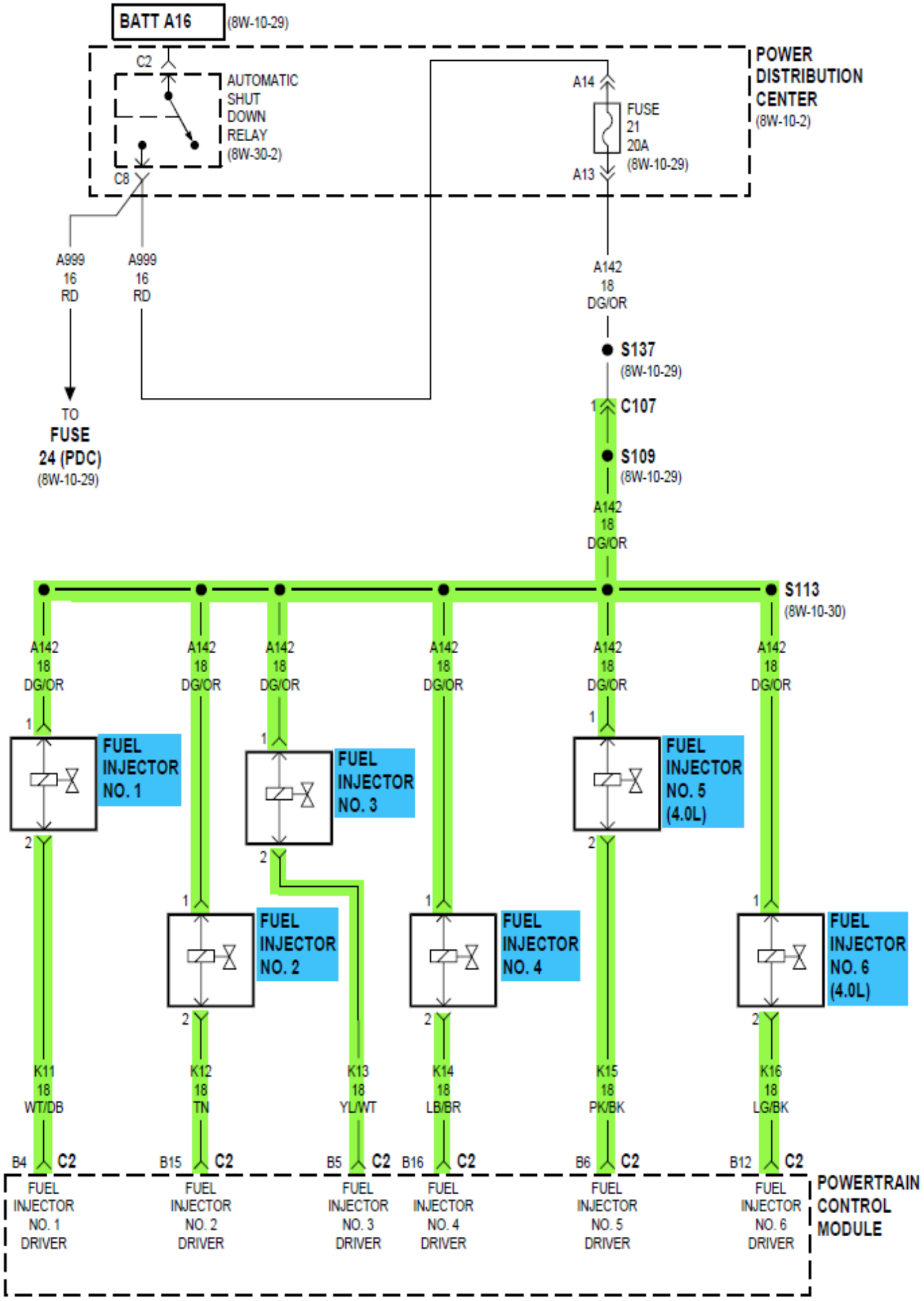
BATT A16
(8W-10-29)
POWER DISTRIBUTION CENTER
(8W-10-2)
C2
AUTOMATIC SHUT DOWN RELAY
(8W-30-2)
C8
A14
FUSE 21 20A
(8W-10-29)
A13
A999 16 RD
A999 16 RD
TO FUSE 24 (PDC)
(8W-10-29)
A142 18 DG/OR
S137
(8W-10-29)
C107
S109
(8W-10-29)
S113
(8W-10-30)
FUEL INJECTOR NO. 1
FUEL INJECTOR NO. 2
FUEL INJECTOR NO. 3
FUEL INJECTOR NO. 4
FUEL INJECTOR NO. 5 (4.0L)
FUEL INJECTOR NO. 6 (4.0L)
K11 18 WT/DB
K12 18 TN
K13 18 YL/WT
K14 18 LB/BR
K15 18 PK/BK
K16 18 LG/BK
B4 C2
B15 C2
B5 C2
B16 C2
B6 C2
B12 C2
FUEL INJECTOR NO. 1 DRIVER
FUEL INJECTOR NO. 2 DRIVER
FUEL INJECTOR NO. 3 DRIVER
FUEL INJECTOR NO. 4 DRIVER
FUEL INJECTOR NO. 5 DRIVER
FUEL INJECTOR NO. 6 DRIVER
POWERTRAIN CONTROL MODULE