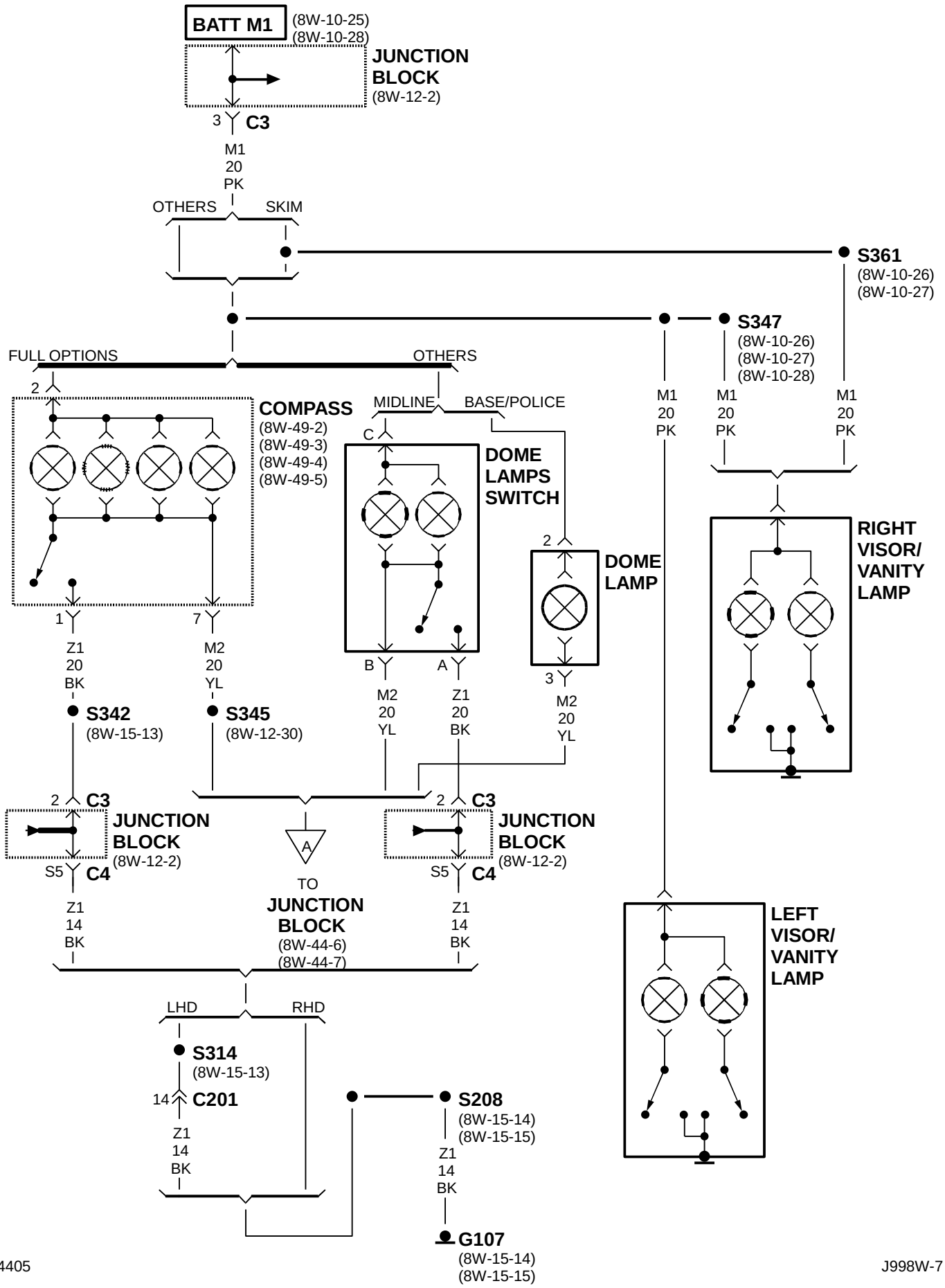
BATT M1
(8W-10-25)
(8W-10-28)
JUNCTION BLOCK
(8W-12-2)
3
C3
M1
20
PK
OTHERS
SKIM
S361
(8W-10-26)
(8W-10-27)
S347
(8W-10-26)
(8W-10-27)
(8W-10-28)
FULL OPTIONS
OTHERS
2
COMPASS
(8W-49-2)
(8W-49-3)
(8W-49-4)
(8W-49-5)
MIDLINE
BASE/POLICE
C
DOME LAMPS SWITCH
M1
20
PK
M1
20
PK
M1
20
PK
RIGHT VISOR/ VANITY LAMP
2
DOME LAMP
1
7
Z1
20
BK
M2
20
YL
B
A
3
M2
20
YL
Z1
20
BK
M2
20
YL
S342
(8W-15-13)
S345
(8W-12-30)
2
C3
JUNCTION BLOCK
(8W-12-2)
S5
C4
A
TO
JUNCTION BLOCK
(8W-44-6)
(8W-44-7)
2
C3
JUNCTION BLOCK
(8W-12-2)
S5
C4
Z1
14
BK
Z1
14
BK
LEFT VISOR/ VANITY LAMP
LHD
RHD
S314
(8W-15-13)
14
C201
Z1
14
BK
S208
(8W-15-14)
(8W-15-15)
Z1
14
BK
G107
(8W-15-14)
(8W-15-15)